SCOTTISH EDUCATION DEPARTMENT

SCOTTISH LEAVING CERTIFICATE EXAMINATION

EXAMINATION PAPERS

1959

EDINBURGH: HER MAJESTY'S STATIONERY OFFICE

1959

PRICE £1 0*s*. 0*d*. NET

SCOTTISH EDUCATION DEPARTMENT—1959

The following is a List of some of the more important Official Publications of the Department relating to the Scottish Leaving Certificate Examination and to the teaching of particular subjects in Senior Secondary Schools. They cannot be purchased from this Office, but may be obtained, either directly from HER MAJESTY'S STATIONERY OFFICE (Scottish Branch), 13A Castle Street, Edinburgh, 2, or through any bookseller. All prices are net, those in brackets include postage.

Circular 30. (September, 1958.) Relating to the conduct of the Scottish Leaving Certificate Examination of 1959. 1*s.* 9*d.* (*1s. 11d.*).

Circular 262. (Revised December, 1956.) Scottish Leaving Certificate attainments required as Entrance Qualifications for Universities, Professions, etc. 1*s.* 3*d.* (*1s. 5d.*).

Introduction of the Ordinary Grade of the Scottish Leaving Certificate. Report of the Working Party on the Curriculum of the Senior Secondary School. 3*s.* 6*d.* (*3s. 10d.*).

Examination Papers. Scottish Leaving Certificate Examination, 1958. 20*s.* (*21s. 3d.*).

Scottish Leaving Certificate Examination. Memorandum for the Guidance of Teachers on the Setting and Marking of School Tests and Examinations :

Agriculture. 9*d.* (*11d.*).
Commercial Subjects. 9*d.* (*11d.*).
English. 1*s.* 3*d.* (*1s. 5d.*).
Geography. 1*s.* 9*d.* (*1s. 11d.*).
History. 1*s.* 0*d.* (*1s. 2d.*).
Latin and Greek. 1*s.* 0*d.* (*1s. 2d.*).
Mathematics. 1*s.* 0*d.* (*1s. 2d.*).
Modern Languages. 2*s.* 0*d.* (*2s. 2d.*).
Music. 9*d.* (*11d.*).
Science. 1*s.* 0*d.* (*1s. 2d.*).
Technical Subjects. 9*d.* (*11d.*).

Note as to Mathematics (Fourth Issue), 1936. 3*d.* (*5d.*).

Mathematics in Secondary Schools. (Formerly out of print now re-issued.) 1*s.* 6*d.* (*1s. 8d.*).

Modern Languages in Secondary Schools. (Reprinted 1956, revised price.) 1*s.* 9*d.* (*1s. 11d.*).

Technical Subjects in Secondary Schools. (Reprinted 1954, revised price.) 2*s.* 0*d.* (*2s. 2d.*).

Technical Subjects in Secondary Schools. Rooms, Equipment and Safety Precautions. 1*s.* 0*d.* (*1s. 2d.*).

SCOTTISH EDUCATION DEPARTMENT

SCOTTISH LEAVING CERTIFICATE EXAMINATION

EXAMINATION PAPERS

1959

EDINBURGH: HER MAJESTY'S STATIONERY OFFICE

1959

CONTENTS

EXAMINATION PAPERS

SCOTTISH LEAVING CERTIFICATE EXAMINATION

The Scottish Leaving Certificate Examination is held annually by the Scottish Education Department. In 1959 it commenced on Monday, 2nd March.

For information as to the purpose and scope of the Examination, and as to the conditions on which pupils (of Scottish schools) may be presented, reference should be made to the Department's Circular 30 (1958), dated 22nd Sept., 1958. (Price 1*s.* 9*d.*; post free 1*s.* 11*d.*)

Note:—Further copies of the Ordnance Survey map extract used in the Higher Geography First Paper may be purchased direct from the Ordnance Survey Office, Leatherhead Road, Chessington, Surrey.

CORRIGENDA

27 Hebrew, higher I, question 3 (b) : in line 3 *read* of *instead of* fo.

37 German, lower (a), Questions : 1 mark is allotted to question 2.

52 Gaelic, lower (b), question 1 : the word, the meaning of which is given at the end of the passage set for translation, should *read* diubhalach *instead of* ddiubhalach.

page 2, question 2 : in line 7 *read* thu *instead of* thud.

ACKNOWLEDGEMENTS

2 English, lower II, question 1 : the passage set for interpretation is an extract from the leading article of " The Times Literary Supplement " of 25th August, 1950, and is reproduced by permission of the Times Publishing Company Limited, London, E.C.4.

46 Spanish, higher I, question 1 : the passage set for translation into English is an extract from " Misericordia " by Benito Perez Galdós and is reproduced by permission of Messrs. Thomas Nelson & Sons Limited, Edinburgh.

70 Italian, higher II (b), question 1 : the passage set for translation into Italian is an extract from " Children of the New Forest " by Captain Marryat and published in " Children's Classics " by Messrs. William Collins Sons & Company Limited, Glasgow, by whose permission it is reproduced.

(C67146) 550 7/59

E

Lower I

1959

SCOTTISH LEAVING CERTIFICATE EXAMINATION

ENGLISH

LOWER GRADE—(FIRST PAPER—COMPOSITION)

Tuesday, 3rd March—9.30 A.M. to 10.30 A.M.

Marks will be deducted for bad spelling and bad punctuation, and for writing that is difficult to read.

Write an appropriate title at the head of your composition.

The value attached to the question is shown in brackets after the question.

Write a composition of **about three pages in length** on any **one** of the following subjects :—

(*a*) You are paying your first visit to a pen-friend abroad. Write a letter home, telling your parents about the house where you are staying and your friend's family.

(*b*) Describe the most memorable thing that has happened to you during the last few months.

(*c*) An account of some craft or manufacturing process in which you are interested.

(*d*) A tribute to Robert Burns on the two hundredth anniversary of his birth by a young person of the twentieth century.

(*e*) Do you approve of man's desire to break records in sport and in other activities ?

(*f*) A story based on the following sentence :—

" I awoke one morning and found myself famous ".

(35)

(C64704)

1959
SCOTTISH LEAVING CERTIFICATE EXAMINATION

ENGLISH

LOWER GRADE

(SECOND PAPER—INTERPRETATION, LANGUAGE, AND LITERATURE)

Tuesday, 3rd March—11.0 A.M. to 1.0 P.M.

All candidates should attempt **FOUR** questions, namely, questions No. 1 and 2 and any **TWO** of the others.

N.B.—Begin the answer (or fair copy of an answer) to each question on a fresh page.

Marks will be deducted for bad spelling and bad punctuation, and for writing that is difficult to read.

The value attached to each question, or to each part of a question, is shown in brackets after the question.

[TURN OVER

1. It is not so very long ago since museums were regarded primarily as citadels for the safe custody of the national collections, whose inspection was permitted more as an act of grace than otherwise. Though they were accessible to the public on these rather chilling terms, only a very small section of the population availed itself of the privilege; and then usually no more than once or twice in a lifetime by way of fulfilling a tiresome civic obligation or just to be able to say they had done so. The millions which stayed away doubtless felt a certain pride in being citizens of a country envied for possessing such rare and immensely valuable treasures. But assuming that these, in common with many other important things, had probably not much human interest, and might well be downright dull, they were not moved by sufficient curiosity "to waste a Sunday"; besides, there would always be time enough to go and see them "one of these days". Until well beyond Victorian times nobody could think of those august and imposing edifices as places where "visitors are welcome". They were recommended for the young as being educational. From enforced visits to them on wet afternoons towards the end of the holidays the young too often returned with a rooted antipathy for museums as being either all beetles and plaster casts, or else all fossils and mummies. The idea of making museums enjoyable, in a youthful sense, would have seemed almost as scandalous as authorizing cribs to the classics in schools.

All that, or most of it, has certainly changed. The public now enjoys, and feels it enjoys, the freedom of what have become *its* museums; many workmen have formed the museum habit and find the turnstiles evoke something of the holiday spirit of seaside piers. During the last thirty years or so the museum authorities have been making commendable and often very successful efforts to humanize their educational rôle. Museum showmanship, if the phrase does not sound too irreverent, has begun to evolve "a new look". Indeed, this is occasionally pushed so far that there is a tendency to confuse means with ends, with the result that museums sometimes seem to be competing with current exhibitions. Valuable as are such modern aids as supplementary photographs, charts, ambulatory lectures, film displays, and centenary exhibits, they can be easily overdone.

Read the passage printed above and then answer the following questions on it, **using as far as possible your own words :—**

(*a*) Express in your own words the meaning of each of the following phrases **as they are used in the passage :—**

chilling terms (line 4); *civic obligation* (line 6); *rooted antipathy* (line 17); *centenary exhibits* (line 31). **(8)**

(*b*) Give the meaning of each of the following words **as they are used in the passage :—**

accessible (line 3); *availed* (line 5); *august* (line 14); *evoke* (line 23); *humanize* (line 26); *current* (line 29). **(6)**

(*c*) Give the name and the relation of each of the following clauses :—

(i) *where visitors are welcome* (line 14);

(ii) *if the phrase does not sound too irreverent* (lines 26–27);

(iii) *that there is a tendency to confuse means with ends* (line 28). **(3)**

(*d*) What was formerly considered to be the main function of a museum? **(2)**

(*e*) Explain in your own words why until fairly recently museums were not popular places with the ordinary public. **(6)**

(*f*) What methods have been used to attract the public to museums ? **(4)**

(*g*) What grounds does the author find for criticizing these methods ? **(3)**

(*h*) Why should the following words,

(i) " visitors are welcome " (line 14), and

(ii) " a new look " (line 27),

be printed within inverted commas ? **(3)**

2. (*a*) Give the meaning of the prefix in each of the following words :— submarine ; expel ; international ; supernatural ; biped.

(*b*) By adding the appropriate prefix, give the word which is exactly opposite in meaning to each of the following :—

similar ; noble ; legible ; rational ; friendly. **(5)**

(*c*) Replace each of the following expressions by a single word equivalent in meaning :—

(i) an instrument for measuring the rise and fall in temperature ;

(ii) the science which studies plant life ;

(iii) a place where birds are kept ;

(iv) the statement of income and expenditure presented annually to Parliament ;

(v) an apparatus for hatching eggs. **(5)**

3. Name a Shakespeare play in which **one** of the following types is depicted :—a miser ; a witty girl ; a usurper ; a ruthless woman ; a drunken hanger-on ; a villain ; a retiring philosopher ; a serving-woman ; an idealistic politician ; a simpleton. Give a description of the character who represents the type you have chosen. **(10)**

4. (*a*) Give a brief account of the action of any ballad **or** other narrative poem which you have read. Illustrate your answer by appropriate quotation. **(10)**

or

(*b*) What do you regard as the best poem you have read or heard recently ? What features of the poem made a strong appeal to you ? Illustrate your answer as fully as you can by appropriate quotation. **(10)**

5. (*a*) Which one of the following characters would you like to have with you in a position of danger and difficulty, and why ?

Salvation Yeo ; Allan Quatermain ; Alan Breck Stewart ; Sherlock Holmes ; Richard Hannay ; Horatio Hornblower. **(10)**

or

(*b*) Describe briefly **one** of the following incidents from any prose work (fiction or non-fiction), which you have read and enjoyed :—

an escape ; an episode of war by sea or land ; a proposal of marriage ; a family scene ; a party or ball ; a scientific process or discovery ; a home-coming. **(10)**

[TURN OVER

6. Describe some of the qualities which you would expect to find in a good essay **or** a good short story. Illustrate these qualities from one example which you have read. **(10)**

7. Choose any good modern biography, **or** autobiography, **or** book of reminiscences. Name the author, indicate his theme, and account for the special interest which the book aroused in you. **(10)**

1959

SCOTTISH LEAVING CERTIFICATE EXAMINATION

ENGLISH

HIGHER GRADE—(FIRST PAPER (*a*)—COMPOSITION)

Tuesday, 3rd March—9.30 A.M. to 10.30 A.M.

Marks will be deducted for bad spelling and bad punctuation, and for writing that is difficult to read.

Write an appropriate title at the head of your composition.

The value attached to the question is shown in brackets after the question.

Write a composition of **about three pages in length** on any **one** of the following subjects :—

(*a*) This year marks the bi-centenary of the birth of Robert Burns. Write a leading newspaper-article on the subject, touching, among other things, on Burns's importance for Scotland and the world.

(*b*) "What I want," said Mr. Gradgrind, "is Facts. Teach these boys and girls nothing but Facts. Facts alone are wanted in life." Do you agree with Mr. Gradgrind's theory of education ?

(*c*) "History *lives* in old buildings, old streets, old places." Discuss this statement, illustrating as freely and widely as possible.

(*d*) The irresponsible, pleasure-loving teenagers of to-day have been contrasted with the hard-working boys and girls of about sixty years ago. Write a defence of the present-day teenager.

(*e*) Discuss some of the ways in which our amusements have been affected by scientific progress.

(*f*) "Ah, yet, ere I descend to the grave,
May I a small house and large garden have ;
And a few friends, and many books, both true,
Both wise, and both delightful too ! "

What are some of the possessions which you think would contribute to *your* happiness ?

(*g*) What advantages does Great Britain derive from her geographical position ?

(*h*) "A locked gate is a remarkably final fact ; whether we are locked in or locked out, our hearts beat the more quickly." Discuss. **(35)**

S

N

M

T

1959
SCOTTISH LEAVING CERTIFICATE EXAMINATION

ENGLISH

HIGHER GRADE—(FIRST PAPER (*b*)—INTERPRETATION AND LANGUAGE)

Tuesday, 3rd March—11.0 A.M. to 12.40 P.M.

Answer all three Questions.

N.B.—Begin the answer (or fair copy of an answer) to each question on a fresh page.

Marks will be deducted for bad spelling and bad punctuation, and for writing that is difficult to read.

The value attached to each question, or to each part of a question, is shown in brackets after the question.

[TURN OVER

1. The circumstances which surround different classes and individuals, and shape their characters, are daily becoming more assimilated. Formerly, different ranks, different neighbourhoods, different trades and professions, lived in what might be called different worlds; at present, to a great degree in the same. Comparatively speaking, they now read the same things, listen to the same things, see the same things, go to the same places, have their hopes and fears directed to the same objects, have the same rights and liberties, and the same means of asserting them. Great as are the differences of position which remain, they are nothing to those which have ceased. And the assimilation is still proceeding. All the political changes of the age promote it, since they all tend to raise the low and to lower the high. Every extension of education promotes it, because education brings people under common influences, and gives them access to the general stock of facts and sentiments. Improvements in the means of communication promote it, by bringing the inhabitants of distant places into personal contact, and keeping up a rapid flow of changes of residence between one place and another. The increase of commerce and manufactures promotes it, by diffusing more widely the advantages of easy circumstances, and opening all objects of ambition, even the highest, to general competition, whereby the desire of rising becomes no longer the character of a particular class, but of all classes. A more powerful agency than even all these, in bringing about a general similarity among mankind, is the complete establishment, in this, and other free countries, of the ascendancy of public opinion in the State. As the various social eminences which enabled persons entrenched on them to disregard the opinion of the multitude gradually become levelled; as the very idea of resisting the will of the public, when it is positively known that they have a will, disappears more and more from the minds of practical politicians; there ceases to be any social support for non-conformity—any substantive power in society, which, itself opposed to the ascendancy of numbers, is interested in taking under its protection opinions and tendencies at variance with those of the public.

John Stuart Mill.

Read the passage printed above, and then answer, **as far as possible in your own words,** the following questions on it :—

(*a*) Explain briefly but clearly the meaning of the following phrases **as they are used in the passage :—**

general stock of facts and sentiments (line 13); *means of communication* (lines 13–14); *ascendancy of public opinion* (line 22); *social eminences* (line 23). **(8)**

(*b*) Give the meaning of the following words **as they are used in the passage :—**

assimilated (line 2); *asserting* (line 8); *diffusing* (line 17); *agency* (line 20); *entrenched* (line 23); *non-conformity* (line 27). **(6)**

(*c*) Give a general analysis of the sentence beginning, "Great as are the differences . . ." (lines 8–9). **(3)**

(*d*) What sentence do you regard as the key or topic sentence of the paragraph? Justify your choice. **(2)**

(*e*) Comment briefly on the importance of the sentence, "And the assimilation is still proceeding." (line 9), in the development of the argument. **(2)**

(*f*) Explain clearly the difference between a " trade " and a " profession " (line 3). **(2)**

(*g*) Express in your own words the meaning of the last few lines of the passage, from " there ceases to be " (lines 26–27) to the end. **(6)**

(*h*) Suggest a suitable title for the passage. **(2)**

(*i*) Make a summary of the whole passage. (N.B.—Your summary should not exceed 120 words.) **(14)**

2. Combine the following statements into a well-knit paragraph :—

The King of the Goths no longer dissembled his appetite for plunder and revenge—he appeared in arms under the walls of the capital—the trembling senate had no hope of relief—they prepared a desperate resistance—they wished to delay the ruin of their country—they were unable to guard against the secret conspiracy of slaves and domestics—these were attached to the cause of the enemy—at midnight the Salarian gate was silently opened—the inhabitants were awakened by the tremendous sound of the Gothic trumpet—the Imperial City was delivered to the licentious fury of the tribes of Germany and Scythia. **(10)**

3. (*a*) Explain the meaning and bring out the force of the prefix in any **five** of the following words :—

hyperbole, antithesis, hypodermic, sympathy, diameter, geophysical, telegram, microscope. **(5)**

(*b*) Choose any **five** of the following, and give an example of each :—

cliché, euphemism, archaism, metonymy, epigram, alliteration, climax. **(5)**

1959
SCOTTISH LEAVING CERTIFICATE EXAMINATION

ENGLISH

HIGHER GRADE—(SECOND PAPER—LITERATURE)

Tuesday, 3rd March—2.0 P.M. to 3.30 P.M.

All candidates should attempt **THREE** questions, namely, question No. 1 and **ANY TWO** of the others.

N.B.—Begin the answer (or fair copy of an answer) to each question on a fresh page.

Marks will be deducted for bad spelling and bad punctuation, and for writing that is difficult to read.

The value attached to each question is shown in brackets after the question.

[TURN OVER

All candidates should attempt THREE questions, namely, question No. 1 and ANY TWO of the others.

1. (*a*) Show by reference to any one comedy how Shakespeare makes his comic characters reveal their own absurdities. **(20)**

or

(*b*) Choose from any Shakespcare tragedies you know two examples of innocent people who are involved in disaster through no fault of their own, and show how Shakespeare enlists our sympathy for them. **(20)**

or

(*c*) To what extent do minor characters give background and atmosphere to Shakespeare's historical plays ? Illustrate your answer by reference to one play or, if you wish, to more than one play. **(20)**

or

(*d*) " Shakespeare's plays frequently present two characters who offset each other, the one possessing certain qualities which the other lacks." Illustrate the truth of this statement by selecting **one** of the following pairs and drawing a contrast between the characters named :—Hamlet and Laertes ; Ariel and Caliban ; Macbeth and Banquo ; Brutus and Cassius ; Rosalind and Celia ; Sir Toby Belch and Sir Andrew Aguecheek ; Hotspur and Prince Hal ; Edmund and Edgar ; Antonio and Bassanio. **(20)**

2. (*a*) " In his *Prologue* Chaucer sometimes tells us a great deal about the character of a pilgrim, while saying little about his appearance and dress. On other occasions, he goes into some detail about dress and physical characteristics, without saying very much directly about character." Choose **one** example of **each** of these two types, and, in the light of your knowledge of the two pilgrims chosen, comment on the truth of this statement. **(15)**

or

(*b*) " Though Chaucer scarcely ever refers to contemporary events, yet he is the social historian of his age." What references or allusions does Chaucer make to contemporary events, and what kind of historical information can we derive from his works ? **(15)**

3. Write a brief description of the character of **one** of the following ; show to what extent the author has made the character convincing and has aroused the interest of the reader in him or her. Give the title and author of the work in which the character appears.

Mr. Elton, Jeanie Deans, St. John Rivers, Amelia Sedley, Mr. Harding, Sydney Carton, The White Knight, Clym Yeobright, Lord Hermiston, Lord Jim, Young Gourlay, Arthur Kipps, Eliza Doolittle, Chris Guthrie. **(15)**

4. Write an appreciation of a lyric by Ben Jonson, **or** Herrick, **or** Blake, **or** Hopkins, **or** Yeats, **or** Dylan Thomas, **or** Hugh McDiarmid. **(15)**

5. Write a brief account of an essay by Addison, **or** Goldsmith, **or** Lamb, **or** by a more recent writer, which deals with some aspect of city life. How far do you regard the author's presentation of his subject as convincing ? **(15)**

6. Choose any **one** of the following poems and say why, in your opinion, it has stood the test of time, and still continues to be appreciated :—

Elegy written in a Country Churchyard ; Tam o' Shanter ; Tintern Abbey ; The Ancient Mariner ; Ode to the West Wind ; Ulysses ; My Last Duchess. **(15)**

7. Choose any **one** of the following prose works, and indicate the qualities in it which appealed to you and which have made it, or are likely to make it memorable :—

Swift's *A Voyage to Lilliput ;* Goldsmith's *The Vicar of Wakefield ;* Darwin's *The Voyage of the Beagle ;* Emily Bronte's *Wuthering Heights ;* George Borrow's *Lavengro ;* R. L. Stevenson's *Dr. Jekyll and Mr. Hyde ;* Hilaire Belloc's *The Path to Rome ;* Kenneth Grahame's *The Wind in the Willows ;* John Buchan's *Montrose ;* T. H. White's *The Sword and the Stone ;* William Golding's *The Lord of the Flies.* **(15)**

8. What aspects of rural life are touched upon in any **one** of the following poems ? What seems to you to be the attitude of the poet towards his theme ?

The Taill of the Uponlandis Mous and the Burges Mous ; L'Allegro ; The Farmer's Ingle ; The Cotter's Saturday Night ; The Village ; Resolution and Independence ; Ode to Autumn ; The Scholar-Gipsy. **(15)**

9. It has been said that the novel, although it is not merely a pleasant form of social history, does impart a flavour of the period which it seeks to describe ; in other words, it gives " a sense of the age ". Select a suitable novel, and indicate how far the author has succeeded in re-creating the period in which the story is set. **(15)**

10. What play, **or** poem, **or** non-fiction prose book, written in the twentieth century, has greatly impressed you ? Without attempting an exhaustive critical analysis of the work you choose, indicate some of the qualities which made a strong appeal to you. **(15)**

1959
SCOTTISH LEAVING CERTIFICATE EXAMINATION

HISTORY

LOWER GRADE

Wednesday, 4th March—9.30 A.M. to 12 NOON

All candidates must attempt FIVE questions, viz., Section 1 and FOUR other questions selected from any part or parts of the paper.

N.B.—Marks will be deducted for bad spelling and bad punctuation, and for writing that is difficult to read.

The value attached to each question, or to each part of a question, is shown in the margin.

Section 1 (to be attempted by all candidates)

Marks

(See separate sheet provided for this Section.) **20**

Section 2 (55 B.C. *to* A.D. 1714)

1. Describe **either** a Romano-British town **or** a Medieval Monastery giving some account of the life of the inhabitants. **20**

2. Write notes on **two** of the following :—the Synod of Whitby ; King Cnut ; the coming of the Normans to Scotland ; Simon de Montfort ; the reasons for the Scottish success in the War of Independence ; the consequences of the Black Death in England ; Henry V. **20**

3. What services were rendered to Henry VIII by Cardinal Wolsey, Archbishop Cranmer and Thomas Cromwell respectively ? **20**

[TURN OVER

Marks

4. **Either** (*a*) Give a brief character sketch of Mary Stewart. 5

Show what political, religious and personal reasons led to her deposition in 1567. 15

or (*b*) Give a brief character sketch of Elizabeth Tudor. 5

Explain her relations with Spain from her accession to 1587. 15

5. Give an account of the policy of Charles I in England and Scotland in the period from 1629 to 1640, showing how far you consider his actions justifiable. 20

6. What domestic problems faced Cromwell as Lord Protector (1653–1658) ? 15

Why did the Protectorate collapse so soon after his death ? 5

7. How do you account for the popularity of James II in 1685 and his unpopularity by the end of 1688 ? 20

8. Outline the growth of the English colonial empire on the mainland of North America in the seventeenth century. 15

Explain briefly why Scottish colonial development during this period was more backward. 5

9. Describe the part played by the Duke of Marlborough in the War of the Spanish Succession and account for his fall from power. 20

Section 3 (1714 to the present day)

10. Explain how the Whig Governments under George I (1714–1727) dealt with (*a*) the Jacobites, (*b*) the South Sea Bubble and (*c*) relations with France. 20

11. Show how and where the British established themselves in India before the Seven Years' War. 15

State briefly the main reasons for British success in India in that war. 5

12. Give an account of the developments in the coal and iron industries in Britain in the eighteenth century. 20

13. Why was there unrest in Britain in the years after 1815 and how far did the Tory reforms of the eighteen-twenties remove the causes of it ? 20

14. Give an account of the movement towards, and the reaction against, Free Trade as shown by the policies of Peel, Gladstone and Joseph Chamberlain. 20

Marks

15. Can the term " splendid isolation " be justified as a description of British foreign policy at the end of the nineteenth century ? **5**

Trace the steps taken in the abandonment of that policy up to the Anglo-Russian Entente of 1907. **15**

16. Write notes on **two** of the following :—

(*a*) the events leading to the British North America Act of 1867 ;

(*b*) the relations of Canada with Britain from the Diamond Jubilee of 1897 to the Statute of Westminster of 1931 ;

(*c*) the opening up of South Africa by white settlers from 1815 to 1854 ;

(*d*) the causes of the Boer War of 1899–1902. **20**

17. Write notes on **two** of the following :—the effect on the Highlands of the failure of the Rising of 1745 ; Charles James Fox ; the Trafalgar campaign ; the causes of the Crimean War ; Charles Darwin ; the General Strike of 1926. **20**

18. (*a*) Describe the events that led up to the adoption of a new constitution in France in 1958 and give some account of the main provisions of that constitution.

or

(*b*) What is meant by the policy of Apartheid ? Describe the circumstances in which it has been adopted by the South African government.

or

(*c*) What have been the main features of the " Welfare State " in Britain in the years since 1945. **20**

1959

SCOTTISH LEAVING CERTIFICATE EXAMINATION

HISTORY

HIGHER GRADE

(SECOND PAPER—EUROPEAN HISTORY)

Wednesday, 4th March—1.30 P.M. to 4.0 P.M.

All candidates must attempt FIVE questions, viz., Section 1 and FOUR other questions selected from any part or parts of the paper.

N.B.—Marks will be deducted for bad spelling and bad punctuation, and for writing that is difficult to read.

20 marks are assigned to each question.

Section 1 (to be attempted by all candidates)

(See separate sheet provided for this Section.)

Section 2 (*Greek and Roman History to* A.D. 410)

1. Compare the methods of government in Athens and Sparta at the time of the outbreak of the Peloponnesian War.

2. Was the rise of Philip of Macedon to the mastery of Greece due more to his own ability or to conditions in the city states of Greece ?

3. Explain the underlying causes of enmity between Rome and Carthage and show the effects upon Rome of her victory in the Punic Wars.

4. " The generous ideas of the Gracchi were taken up by Julius Caesar but worked out by him with greater prudence and on an ampler scale ". Discuss this opinion.

5. What dangers confronted the Roman Empire at the accession of Diocletian and what steps to save it were taken by him and by Constantine ?

6. Write notes on **two** of the following :—the Messenian Wars against Sparta ; the Confederacy of Delos ; Alcibiades ; Plato ; the Second Triumvirate ; Roman provincial administration under Augustus.

[TURN OVER

Section 3 (*Medieval History*, 410 *to* 1453)

7. Explain the importance of the reign of Charlemagne and of the break-up of his empire after his death.

8. What evidence is there of a religious and intellectual revival in western Europe during the twelfth century ?

9. " The last of the great Emperors and the first of great modern kings." Is this description of Frederic II justified ?

10. Illustrate and explain the strength of the French monarchy at the end of the thirteenth century and account for its weakness by the middle of the fourteenth.

11. What dangers threatened the Papacy between the beginning of the Great Schism in 1378 and the dissolution of the Council of Basle in 1449, and how far did it overcome them ?

12. Write notes on **two** of the following :—the Visigoths in Italy ; the rise of the Capetian dynasty ; the Investiture Contest ; the Sicilian Vespers ; the Visconti of Milan ; Philip the Good of Burgundy.

Section 4 (*Modern History* (*A*), 1453 *to* 1763)

13. " The discovery of the sea passage to India by Vasco da Gama was more important in its effects than the crossing of the Atlantic by Columbus ". How far is this true ?

14. Trace the steps by which the Empire of Charles V came into existence and show the causes of its instability.

15. " The political and religious fragmentation of Germany began at Augsburg in 1555 and triumphed at Westphalia in 1648 ". Is this statement justified ?

16. How far is it true to say that the power of Louis XIV increased till 1685 and declined thereafter ?

17. Why did Sweden become a great Power in the seventeenth century but cease to be one in the eighteenth ?

18. Write notes on **two** of the following :—Lorenzo di Medici ; the French Wars of Religion ; William the Silent ; the Fronde ; Cardinal Fleury ; Austro-Prussian relations, 1740–1748.

Section 5 (*Modern History* (*B*), 1763 *to* 1914)

19. What were the grievances respectively of the bourgeois and the peasants on the eve of the French Revolution ?

20. Describe the settlement of Europe made at the Congress of Vienna and explain its merits and its defects.

21. Explain the causes and effects of the revolutions of 1848 in the dominions of the Austrian Empire.

22. " Blood and iron ". Is this a satisfactory description of Bismarck's methods in home and foreign affairs ?

23. To what extent were the Balkans the storm-centre of Europe during the years 1878–1914 ?

24. Write notes on **two** of the following :—Catherine II of Russia ; Napoleon Bonaparte's Italian campaigns ; Mehemet Ali ; Karl Marx ; the " Liberal Empire " of Napoleon III ; the Algeciras Conference.

1959

SCOTTISH LEAVING CERTIFICATE EXAMINATION

GEOGRAPHY

LOWER GRADE

Thursday, 5th March—9.30 A.M. to 12 NOON

Candidates should attempt SEVEN questions, viz., the three questions of Section A, together with four other questions (from Sections B and C), of which ONE but not more than TWO must be from Section B, the remainder being from Section C.

Candidates should read the questions carefully. The answers should be clearly expressed and entirely relevant.

N.B.—Write legibly and neatly, and leave a space of about half an inch between the lines.

Marks will be deducted for bad spelling and bad punctuation, and for writing that is difficult to read.

The value attached to each question, or to each part of a question, is shown in the margin.

[TURN OVER

SECTION A

The whole of this Section should be attempted

Marks

1. On the accompanying map of part of the British Isles :—

(*a*) (i) Name the islands marked A, B, and C, the rivers marked D, E, and F, and the towns marked with a dot. 3

(ii) Name the Wicklow Mountains, the Plain of Cheshire, Cardigan Bay, and the Lothians. 2

(iii) Mark thus,  , and name the Aire Gap and the Tyne Gap. 1

(*b*) Insert with a continuous line and name the 60° F. isotherm for July. 1

(*c*) Mark and name a hydro-electric station in Scotland, a holiday resort in Wales, and a ship-building town in Ireland. 3

(*d*) The following towns are named on the map. Beside each, print an industry for which it is noted :—

Dublin ; Port Talbot ; Barrow ; Grangemouth ; Preston ; Kilmarnock. 3

(13)

2. On the accompanying map of the world :—

(*a*) Mark and name the largest town in each of the following islands :—

Tasmania ; Vancouver ; Cyprus ; Iceland ; Java ; Cuba. 1½

(*b*) Beside each of the areas marked A, B, and C print :—

(i) the type of climate experienced in the area ;

(ii) an important town in each ; and

(iii) an important crop grown in the area. 4½

(*c*) P, Q, R, S, and T are noted for the production of minerals. Name the mineral produced at each. 2½

(*d*) Name the natural vegetation of the three stippled areas. 1½

(*e*) The following points: 15° N, 30°W ; 15° N, 120° W ; 60° N, 120° W ; 60° N, 30° W, are lettered X, Y, Z, and W respectively.

(i) State the difference in time between X and Y, printing your answer beside Y. 1

(ii) Print "longer" or "shorter" between Z and W to indicate whether the actual distance between Z and W is longer or shorter than that between X and Y. 1

(12)

3. Study the contour map supplied and then answer the following :—

(*a*) Describe the relief and drainage in **not more** than 20 lines. 7

(*b*) Describe the site of Town A and show how much can be deduced from the map about its importance. 4

(*c*) The eastern and western parts of the area **within** the broken line are very different in appearance and land utilisation. Using the information on the map, briefly describe the appearance and possible land utilisation of each part. 4

(15)

SECTIONS B and C

Candidates should attempt FOUR questions from Sections B and C. Of these ONE, BUT NOT MORE THAN TWO, must be from Section B, the remainder being from Section C.

In any question credit will be given for appropriate sketch-maps and diagrams. Geographical descriptions must include a sketch-map.

SECTION B

Marks

4. (i) Why are the tundra and the coniferous forests of northern latitudes sparsely peopled ? **10**

(ii) Describe the appearance of the transition zone from the one to the other. **5**

(15)

5. Write a geographical essay on the production of cotton, drawing your examples from the United States, India, and Egypt. **(15)**

6. Show how prevailing winds and ocean currents influence the climate of the coastal lands on the eastern side of the North Atlantic. **(15)**

7. Under what conditions does a river (*a*) erode and (*b*) deposit on its way to the sea ? Illustrate your answer with appropriate diagrams. (Five of the marks are reserved for the appropriate diagrams.) **(15)**

SECTION C

British Isles

8. (i) Select **either** Aberdeenshire and East Anglia **or** Fife and Cornwall and show how the two areas selected differ in relief and climate. **9**

(ii) How far are these differences responsible for differences in the farming of the areas selected ? **6**

(15)

9. Attempt **either** (*a*) **or** (*b*) :—

(*a*) Write a geographical essay on any **one** of the following :—

(i) the fishing industry of Scotland ;

(ii) fruit growing in the British Isles ;

(iii) one of the main industries of your local area other than farming, mentioning in your answer transport and markets ;

(iv) a textile industry of England. **(15)**

(*b*) (i) Write notes on (1) Edinburgh as a capital, (2) Aberdeen as a regional capital, and (3) Glasgow as a commercial and industrial capital. **12**

(ii) How would you classify Dundee ? Give **two** good reasons for your answer. **3**

(15)

10. (*Turn over*)

Marks

Europe, excluding the British Isles

10. Draw sketch-maps to illustrate the position and importance of **three** of the following :—

Hamburg ; Marseilles ; Genoa ; Belgrade ; Brussels ; Barcelona ; Copenhagen ; Cologne. **(15)**

11. Write an orderly geographical account of **one** of the following :— Switzerland ; Sweden ; Hungary. **(15)**

The Rest of the World

12. Choose **one** of the transcontinental railways of North America. Describe the relief and vegetation of the land along the route and the occupations of the people who live there. **(15)**

13. Write a geographical description of **one** of the following :—

Alberta ; Province of Quebec ; Florida ; Texas ; New England States. **(15)**

14. Attempt **either** (*a*) **or** (*b*) :—

(*a*) Account for the fact that Eastern Pakistan has 775 people per square mile and Western Pakistan has only 92 people per square mile. **(15)**

(*b*) Under the headings of climate, population distribution, and development, indicate the similarities and differences between Northern Australia and the Deccan of India. **(15)**

15. Describe the savannas of Africa under the headings of location, climate, vegetation, and products. In your answer show how their climate, vegetation, and products are interrelated. **(15)**

16. Describe the geographical factors which have made :—

(i) Sydney and Melbourne the two largest cities in Australia ; and

(ii) Wool, mutton, and butter three important exports of New Zealand. **(15)**

17. Give an account of the mineral resources of South America. **(15)**

1959
SCOTTISH LEAVING CERTIFICATE EXAMINATION

GEOGRAPHY

HIGHER GRADE—(FIRST PAPER)

Thursday, 5th March—9.30 A.M. to 12 NOON

Candidates should attempt FIVE questions, viz., the two questions of Section A, together with any three questions taken from Section B.

Candidates should read the questions carefully. The answers should be clearly expressed and entirely relevant.

In any question credit will be given for appropriate sketch-maps and diagrams.

N.B.—Write legibly and neatly, and leave a space of about half an inch between the lines.

Marks will be deducted for bad spelling and bad punctuation, and for writing that is difficult to read.

The value attached to each question is shown in the margin.

[TURN OVER

SECTION A

The two questions of this Section should be attempted.

Marks

1. After studying the part of the Ordnance Survey map which is provided :—

(*a*) Draw a **bold** sketch-map of the area north of northing 380 to show relief, drainage and the sites of Bingley, Keighley, Silsden, and Ilkley. (Your sketch-map should occupy half a page or more.) **16**

(*b*) Discuss the position and growth of these four towns. **10**

(*c*) Comment on the influence of relief and drainage on the railway from Denholme Station (074338) to Kildwick and Cross Station (008454). **8**

(*d*) This map measures 8 in. by $10\frac{1}{2}$ in. If a map of the same area measured 4 in. by $5\frac{1}{4}$ in., what would its scale be as a representative fraction ? **2**

(36)

2. On the accompanying map of the Atlantic Ocean and adjacent lands :—

(*a*) Mark, with arrows to show direction, and name :—

(i) the winds of the South Atlantic, south of 15° S., during June ; and

(ii) the currents and drifts of the North Atlantic, north of 15° N. **4**

(*b*) Mark two separate areas where fog is common. **2**

(*c*) Delimit and name the main types of vegetation found in South America, east of the Andes. **6**

(*d*) Mark and name a port noted for the export of coffee and another for the export of wheat. Print the appropriate commodity after each. **2**

(*e*) Mark with the letters given in brackets, areas in Africa noted for the production of cocoa (C) and for the mining of tin (T) (one area for each). **2**

(16)

SECTION B

THREE questions should be attempted.

Marks

3. Give a general account of the sea as an agent of erosion and deposition. Illustrate your answer with appropriate diagrams. (Five marks will be allocated to the diagrams.) **(16)**

4. Answer the following, **giving reasons for your answers to (a) and (b) :—**

(*a*) At which of the following latitudes does sunset occur earliest on June 21st :—30° N., 30° S., 50° N., 50° S., assuming the same longitude in each case. **6**

(*b*) When it is 9 a.m. December 25th, at Tokyo (36° N., 140° E.) what is the time and date at San Francisco (38° N., 122° W.) ? **6**

(*c*) A, B, and C are three places lying in a straight line on a map. A to B is three miles, and B to C is two miles. **Calculate** whether A is visible from C or not, A being 750 feet, B 400 feet, and C 250 feet above sea level. **4**

(16)

5. The following climatic statistics refer to two places, A and B. Indicate where, in your opinion, they are situated, stating clearly but briefly how you have reached your conclusions. (A is 518 feet and B is 85 feet above sea level.)

		J.	F.	M.	A.	M.	J.	Jy.	A.	S.	O.	N.	D.	Year
A	°F.	71·1	73·4	72·9	70·0	66·0	62·1	60·6	60·6	61·3	61·9	65·8	69·8	66·2
	Inches	0	0	0	0	0	·2	·3	·5	·5	·1	0	0	1·6
B	°F.	58·8	57·6	54·5	47·8	41·2	35·4	35·1	38·3	43·5	48·7	53·1	56·3	47·5
	Inches	·6	·4	·3	·6	·6	·5	·7	·4	·2	·4	·5	·8	6·0

(16)

6. (*a*) Name an example of :—(i) a large irrigated area ;
(ii) a large drainage undertaking ; and
(iii) a scheme for power from water.

(*b*) What geographical conditions occasion and favour them ? **(16)**

7. Write a geographical essay on air transport, referring to climatic conditions, great circle routes, and limitations imposed by weight. **(16)**

8. (*Turn over.*)

Marks

8. Select any large area where high altitudes are more densely peopled than coastal areas. Account for this density distribution of population. (16)

9. (*a*) The following names apply to types of human communities. Select **FOUR** and state clearly but briefly what each means.

Arab ; Moslem ; Swiss ; Negro ; Hindu ; Egyptian.

(*b*) Select the Moslem **OR** Negro **OR** Hindu community and give its distribution throughout the world and mention the problems which arise out of this distribution. (16)

1959
SCOTTISH LEAVING CERTIFICATE EXAMINATION

GEOGRAPHY

HIGHER GRADE—(SECOND PAPER)

Thursday, 5th March—1.30 P.M. to 4 P.M.

Candidates should attempt **FIVE** questions from **FOUR** sections which must include Sections **A, B.** and **C,** the fourth section being **EITHER** Section **D OR** Section **E,** viz., one question from each of the four sections and a fifth from any one of these four sections.

Candidates should read the questions carefully. The answers should be clearly expressed and entirely relevant.

In any question credit will be given for appropriate sketch-maps and diagrams. Geographical descriptions must include a sketch-map.

N.B.—Write legibly and neatly, and leave a space of about half an inch between the lines.

Marks will be deducted for bad spelling and bad punctuation, and for writing that is difficult to read.

The value attached to each question is shown in the margin.

[TURN OVER

SECTION A

British Isles. *Marks*

1. Account for the growth and prominence of London as a British city and of Glasgow as a Scottish seaport. (Appropriate sketch-maps must be included.) (20)

2. Compare and contrast the climatic conditions found at Stornoway, Scilly Isles, and York, accounting for their differences and similarities. (20)

3. Attempt **either** (*a*) **or** (*b*) :—

(*a*) Describe the scenery one would see **either** on a journey from Crewe via Rugby to London **or** on a journey from Stirling via Perth to Inverness. (Comment on typical features of the route, such as relief, types of farming, signs of industries, towns, etc.) (20)

(*b*) Write a geographical description of Northern Ireland. (20)

SECTION B

Europe.

4. Attempt **either** (*a*) **or** (*b*) :—

(*a*) Write a geographical description of Switzerland **or** Yugoslavia **or** Belgium to show how physical environment and natural resources have influenced the occupations and distribution of the inhabitants. (20)

(*b*) Describe and account for the distribution of population in Spain and Portugal **or** Italy **or** Sweden. (20)

5. Name the main European areas for the production of timber and olives. Comment on their distributions. (20)

6. On a sketch-map divide **either** France **or** West Germany into major regions and give a geographical description of **one** of the regions of the country selected. (20)

7. Write a geographical essay on **either** the value of its rivers to European U.S.S.R. **or** the rail communications of U.S.S.R. (20)

SECTION C

North America. *Marks*

8. Give an account of the development of the prairies of Canada during this century. Make use of the following statistics in your answer :—

POPULATION

Year	Winnipeg	Regina	Edmonton
1901	42,300	2,200	4,100
1931	217,600	53,200	78,800
1951	235,700	71,300	183,400

(20)

9. Write an orderly geographical description of **one** of the following :—
Texas ; New England States ; Cuba ; Corn Belt. **(20)**

10. Why have the Great Lakes been of such profound importance to North America ? Give a brief account of how their seaward communications are being improved. **(20)**

SECTION D

Asia.

11. (i) Draw a sketch-map to show the frontiers between India and Eastern and Western Pakistan.

(ii) To what extent does each country supply the raw materials and food required by the other ? **(20)**

12. Nearly one quarter of the world's population lives in China, occupying little more than a quarter of the area of the country. What are the parts of China which are so densely peopled and why can they support so enormous a population ? **(20)**

13. Describe the production of oil in the Middle East under the headings of oilfields, transport, and markets. **(20)**

SECTION E

The Southern Continents.

14. Give a geographical account of **either** the industries of Australia other than farming **or** the farming of New Zealand. **(20)**

15. Describe and account for the density distribution of population in **either** Chile **or** Argentina. **(20)**

16. (i) Show by means of a sketch-map the distribution of savanna and equatorial rain forest in Africa.

(ii) What are the geographical conditions which account for the distribution of each in that continent ? **(20)**

S

B

A

F

M
20

In

1959

SCOTTISH LEAVING CERTIFICATE EXAMINATION

ARITHMETIC

Monday, 2nd March—9.15 A.M. to 10.30 A.M.

Only FIVE questions should be answered.

Before attempting to answer any question, candidates should read the whole of it very carefully, since time is often lost through misapprehension as to what is really required.

All the working must be legible and shown in its proper position in the answer, and, when necessary, the different steps should be clearly indicated.

Four-place logarithmic tables and tables of square roots are provided. The use of logarithms is permitted only in questions 9 and 10.

Marks will be deducted for careless or badly arranged work.

20 marks are assigned to each question.

In questions 1 to 8 the use of logarithmic tables is not permitted.

1. (i) Evaluate $\dfrac{0\cdot000108 \times 0\cdot009}{0\cdot0036}$.

   (ii) Multiply 3 miles 150 yards by 73.

   (iii) Find the cost of 17 hundredweights of coal at £7 13*s*. 4*d*. per ton.

   (iv) Divide £425 5*s*. into two parts in the ratio 1 : 20.

   (v) Find the simple interest on £170 invested for 4 months at 3 per cent. per annum.

2. From Sunday, 15th June, to Sunday, 14th September, 1958, inclusive, an excursion train was run every Sunday from an inland town to a number of seaside resorts. There were sold, altogether, 1,764 tickets at 4*s.* 3*d.* each, 2,716 at 5*s.* 4*d.*, and 2,464 at 6*s.* 7*d.* Calculate (i) the total receipts and (ii) the average receipts per train.

3. On a certain day a canteen provided 1,200 meals at 1*s.* 9*d.* each ; other sales totalled £18 13*s.* 4*d.* On the following day the number of meals increased by $2\frac{1}{2}$ per cent., and the receipts from the other sales increased by $3\frac{3}{4}$ per cent. Calculate, correct to a quarter of one per cent., the percentage increase in the total receipts.

4. A room is 14 feet long and 10 feet 3 inches broad, and a frieze round the top of the walls is 1 foot 4 inches deep. The total cost of painting the ceiling and frieze amounted to £2 17*s.* 6*d.* Calculate, correct to a tenth of a penny, the cost per square foot.

5. A house, valued at £5,300, is assessed at £67. In 1957 the owner-occupier paid

(i) feu-duty of £7 12*s.*,

(ii) an insurance premium on the value of the house at 2*s.* 3*d.* per cent.,

(iii) £15 10*s.* for repairs and maintenance,

(iv) local rates at 23*s.* 5*d.* in the £ of assessed rental,

(v) property-tax at 8*s.* 6*d.* in the £, the property-tax being charged on the assessed rental diminished by (*a*) the feu-duty and (*b*) an allowance for repairs equal to one-fifth of the assessed rental.

Calculate the total outlay for the year.

6. Given that 1 pound Troy is 5,760 grains and that 1 pound Avoirdupois is 7,000 grains, express, correct to four significant figures, 1 pound Troy in pounds Avoirdupois. (The grain is the same in both systems of units.)

Given also that 1 pound Troy is 12 ounces Troy, express, correct to three significant figures, 1 ounce Troy in ounces Avoirdupois.

7. A motorist left the centre of a city at 10.14 a.m. He crossed the city boundary at 10.27 a.m., having travelled a distance of 5·2 miles. What was his average speed in miles per hour ?

He now increased his speed and completed the remaining 24·5 miles of his journey at an average speed of 35 miles per hour. At what time did he complete his journey ?

Calculate, in miles per hour, his average speed for the whole journey.

8. A man who received a legacy of £1,532 invested part of it in $3\frac{1}{2}$ per cent. War Stock at $66\frac{1}{2}$ so as to obtain an assured income of £56 per year. How much did he invest in this way ?

He invested the remainder of the legacy in the ordinary shares of a company and paid 18*s*. for each 5*s*. share. What income did he receive from this source on a dividend of $17\frac{1}{2}$ per cent. ?

9. (i) Evaluate, using logarithms,

$$(a)\ \frac{1}{0\cdot432}; \quad (b)\ \sqrt[3]{(0\cdot432)}.$$

(ii) A metal plate weighs 55·3 kilograms per square metre. How many pounds does it weigh per square foot ?

(1 kilogram = 2·205 pounds,

1 metre = 39·37 inches.)

10. A cylindrical tank has a circumference of 7 feet 6 inches and a height of 3 feet 8 inches. Neglecting the thickness of the metal of which it is made, calculate the capacity of the tank in gallons.

(1 gallon = 0·1606 cubic feet,

$\pi = 3\cdot142$.)

SC

Befo

All

Fou

Mar

The

1959
SCOTTISH LEAVING CERTIFICATE EXAMINATION

MATHEMATICS

LOWER GRADE—(FIRST PAPER)

Monday, 9th March—9.30 A.M. to 11.30 A.M.

Before attempting to answer any question, candidates should read the whole of it very carefully, since time is often lost through misapprehension as to what is really required.

All the figures should be neatly drawn, and, where it is necessary to turn over a page during the answer to a question, a rough copy of the figure **MUST** be drawn on the fresh page. All the steps of the proofs must be given, and it should be clearly shown on what assumptions the demonstrations are based. Where geometrical references are necessary, care should be taken to ensure that such references are clear and intelligible; textbook reference numbers should **NOT** be used.

Four-place mathematical tables are provided.

Marks will be deducted for careless or badly arranged work.

The value attached to each question, or to each part of a question, is shown in the margin.

[TURN OVER

SECTION I

All the questions in this Section should be attempted.

Marks

1. Prove that the straight line from the mid-point of a side of a triangle parallel to a second side bisects the third side. **11**

2. Prove that the internal bisector of an angle of a triangle divides the opposite side in the ratio of the sides containing the angle bisected. **12**

3. With the usual notation for the sides and angles of a triangle ABC, write down formulae for the area of the triangle in terms of

(i) b and h, where h is the altitude to the side AC ;

(ii) b, c, and A ;

(iii) a, b, and c, and s, where $2s = a + b + c$. **3**

In the triangle ABC, AB is 17 inches long, BC is 21 inches long, and CA is 10 inches long ; AD is the altitude from A to BC. Calculate the length of AD. **7**

4. (*The figures in this question need not be reproduced. References are not required.*)

(i) ABCD is a quadrilateral inscribed in a circle. The angles ADB, BDC, CBD, DBA, and BAD are $x°$, $x°$, $2y°$, $y°$, and $110°$ respectively. Find x and y. **4**

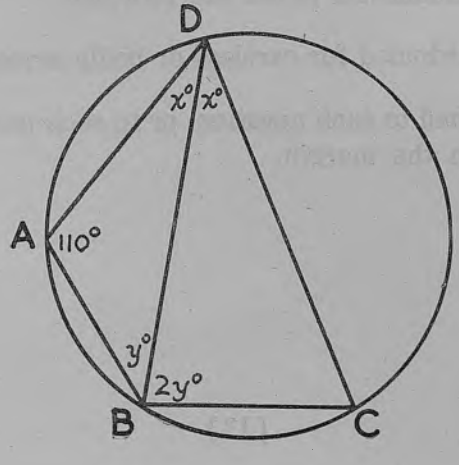

Marks

(ii) The sides AB, BC, and CA of a triangle ABC are of lengths 15 units, 18 units, and 12 units respectively; LM is of length 8 units and is drawn so that angle BLM = angle ACB. Find the length of BM. **4**

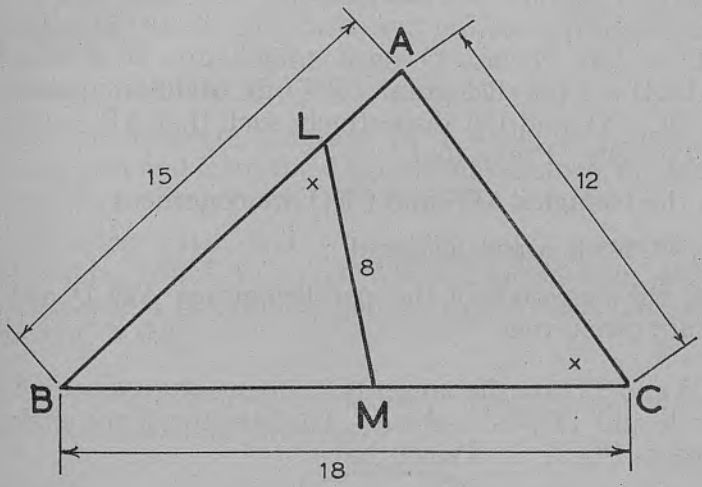

(iii) In the tetrahedron ABCD, BC is 20 inches long, the angles ADB, ADC, and BDC are right angles, and the angles ACD and CBD are each 30 degrees. Calculate the length of AD. **4**

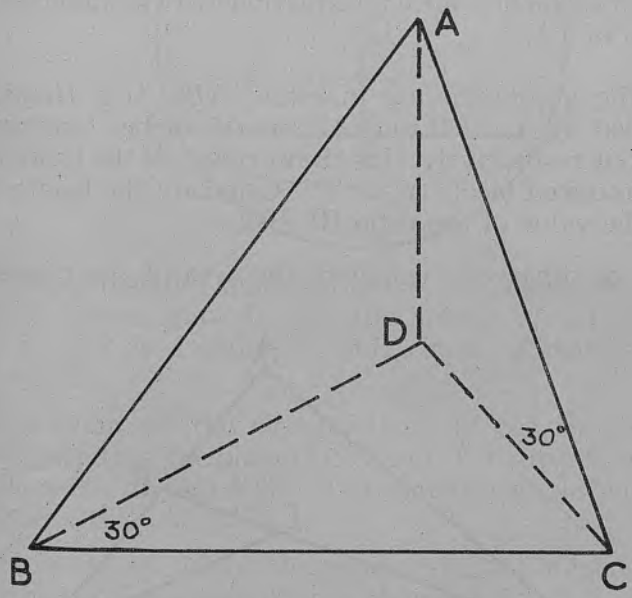

(iv) O is a fixed point distant 4 inches from a fixed straight line XY of unlimited length. P is a variable point in XY, and OP is divided in the ratio 2 : 3 at a point Q. What is the locus of Q? **4**

5. (*Turn over.*)

SECTION II

Only THREE questions should be attempted from this Section.

Marks

5. ABCD is a parallelogram. P, Q, R, and S are points in AB, BC, CD, and DA respectively such that AP = CR and BQ = DS. Prove that

(i) the triangles APS and CRQ are congruent ; 6

(ii) PQRS is a parallelogram ; 3

(iii) the diagonals of the parallelograms ABCD and PQRS are concurrent. 8

6. TA and TB are the tangents from an external point T to a circle and TPQ is a secant. The bisector of the angle PAQ meets PQ at S. Prove that

(i) TS = TA ; 6

(ii) BS bisects the angle PBQ. 5

If PS is of length 3 inches, SQ of length 4 inches, and TA of length x inches, form an equation in x and determine the length of TA. 6

7. In the accompanying diagram, ABC is a triangle right-angled at A. AB and AC are 15 inches long and 8 inches long respectively. I is the in-centre of the triangle, and BI produced meets AC at E. Calculate the length of CE and the value of the ratio BI : BE. 6, 4

Hence, or otherwise, calculate the area of the triangle IBC. 7

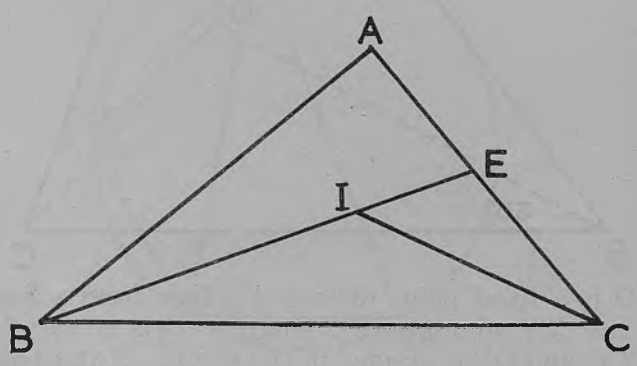

Marks

8. (*In this question, constructions should not be stated, but all necessary lines and arcs should be clearly shown.*)

(i) The sides PQ, QR, and RP of a triangle PQR are of lengths 150 yards, 130 yards, and 115 yards respectively. A point X is equidistant from Q and R and is also equidistant from PQ and PR.

Draw an accurate diagram to a scale of 1 inch to 50 yards, and find from the diagram the distance, in yards, of X (*a*) from the point P ; (*b*) from the line QR. **8**

(ii) Using ruler and compasses only, construct a quadrilateral ABCD in which AB is 2 inches long, BC is $2\frac{1}{2}$ inches long, CD is 3 inches long, angle ABC is 120°, and angle ADC is 90°. **9**

9. (*The diagram for this question should be copied into your answer book and completed.*)

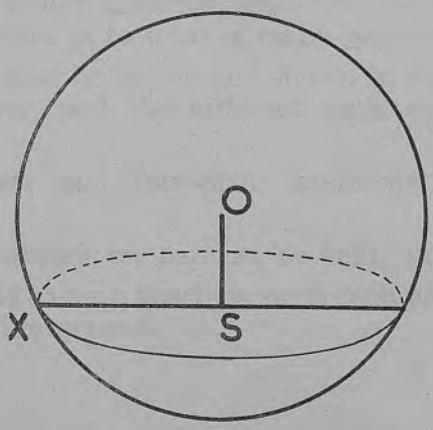

O is the centre of a sphere of radius 13 inches. A plane distant 5 inches from O cuts the sphere in a circle of centre S. SX is a radius of this circle. Calculate the length of SX. **4**

Y is a point on the circumference of the circle with centre S such that the planes OSX and OSY are inclined at an angle of 60° to each other. Calculate the angle between the planes OXY and SXY. **8**

SO is produced to cut the sphere at Z. Calculate the angle which ZY makes with the plane SXY. **5**

SC

Be

All

Squ

Ma
Th

1

R =

(
and

1959
SCOTTISH LEAVING CERTIFICATE EXAMINATION

MATHEMATICS

LOWER GRADE—(SECOND PAPER)

Monday, 9th March—1.0 P.M. to 3.30 P.M.

Before attempting to answer any question, candidates should read the whole of it very carefully, since time is often lost through misapprehension as to what is really required.

All the working must be legible and shown in its proper position in the answer, and the different steps should be clearly indicated.

Square-ruled paper and four-place mathematical tables are provided.

Marks will be deducted for careless or badly arranged work.

The value attached to each question, or to each part of a question, is shown in the margin.

SECTION I

All the questions in this Section should be attempted.

Marks

1. (i) If $C = \dfrac{E}{\sqrt{(R^2 + X^2)}}$, calculate C when $E = 240$, $R = 6{\cdot}34$, and $X = 7{\cdot}6$. **5**

(ii) In the above formula, express X in terms of C, E, and R. **5**

Marks

2. (i) Factorise $x^3 - x^2 - 4x + 4$. **4**

(ii) Solve the equations

$$\frac{x-1}{2} + \frac{y-1}{3} = 0,$$

$$2x - \frac{3y-1}{2} + 16 = 0.$$ **7**

(iii) The price of sugar is x pence a pound. If the price goes up by $\frac{1}{2}d.$ a pound, one pound less can be bought for 10 shillings. Form an equation, in x alone, from which the original price may be found.

(*Do not simplify or solve the equation.*) **5**

3. (i) At a sale, goods are reduced by p shillings in the £. How much, in £'s, will actually be paid for a dress originally priced at £q ? **3**

(ii) The largest possible circular plate is to be cut from a square sheet of metal of side s inches. Taking $\pi = 3 \cdot 14$, find the area of the metal that is left, and express this area as a percentage of the area of the square. **5**

4. (i) Find the values of x, y, and z between 0° and 180° for which (*a*) $\log \tan x = \bar{1} \cdot 5626$; (*b*) $\sin y = 0 \cdot 7007$; (*c*) $\sin z = 2 \cos z$. **5**

(ii) If $\cos \theta = \dfrac{1-t^2}{1+t^2}$, calculate (*a*) the value of θ between 0° and 180° when $t = 0 \cdot 6$, and (*b*) the values of t when $\theta = 120°$. **7**

(iii) B is 500 yards due East of A ; C bears 49° 50′ East of North from A and 35° 55′ West of North from B. Find the distance of C from B. **6**

SECTION II

Only THREE questions should be attempted from this Section.

5. (i) Divide $8x^3 - 16x - 3$ by $2x - 3$. **3**

Hence solve completely the equation $8x^3 - 16x - 3 = 0$, giving the roots, where appropriate, correct to two decimal places. **7**

(ii) If $a = 1 + \dfrac{p}{2}$ and $b = 1 - \dfrac{2}{p}$, verify that

$$\frac{1}{a} + \frac{1}{b} - 1 = \frac{2}{ab}.$$ **6**

Marks

6. The following table gives the values of y, where $y = \sin x + 2 \cos x$, for various values of x.

$x°$	0	15	30	45	60	75	90	105	120	135
y	2·00	2·19	2·23	2·12	1·87	1·48	1·00	0·45	−0·13	−0·71

Using 1 inch to represent 30° on the x-axis and 2 inches to represent 1 unit on the y-axis, draw the graph of $y = \sin x + 2 \cos x$ for $x = 0°$ to $x = 135°$. 9

From your graph, reading in (*a*) to two decimal places and in (*b*), (*c*), and (*d*) to the nearest degree,

(*a*) evaluate $\sin x + 2 \cos x$ when $x = 39°$;

(*b*) solve the equation $\sin x + 2 \cos x = 0 \cdot 5$;

(*c*) solve the equation $2 \sin x + 4 \cos x + 1 = 0$;

(*d*) find the values of x between which $\sin x + 2 \cos x$ is greater than $2 \cdot 1$. 7

7. Two straight roads cross at right angles. A boy, A, is running along one road at a speed of 6 yards per second and, when he crosses the junction, another boy, B, running at 8 yards per second along the other road towards the junction is 80 yards from it.

(i) Find the distances of A and B from the junction t seconds after A crosses it, and show that A and B are then $\sqrt{(100t^2 - 1280t + 6400)}$ yards apart. 8

(ii) Find the value of t when A and B are again 80 yards apart. 4

(iii) Show, in one diagram, which need not be drawn to scale but which should show distances clearly, the positions A_1 and B_1, of A and B respectively, when A is at the junction, and their positions A_2 and B_2 when they are again 80 yards apart. 4

8. (*Turn over.*)

Marks

8. (*The diagram should be copied into your answer book, and any construction lines added.*)

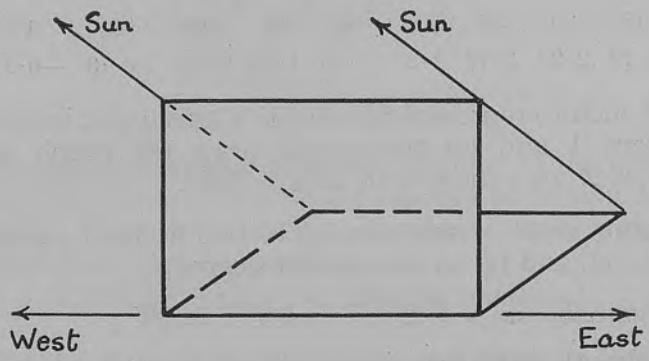

The diagram shows a rectangular hoarding, 20 feet long and 15 feet high, standing in a vertical plane in an East-West direction. The sun is in the South West at an elevation of 48° 30′.

(i) Calculate the length of the shorter side of the parallelogram shadow cast on the horizontal ground by the hoarding, and also the area of the shadow. **4, 4**

(ii) Calculate the length of the shorter diagonal of the parallelogram and the angle of elevation of the top eastern corner of the hoarding when viewed from the centre of the parallelogram. **5, 3**

9. (i) On a railway curve the square of the safe speed varies as the tangent of the angle of banking of the track. When the angle of banking is 5°, the safe speed is 30 miles per hour. What is the safe speed when the angle of banking is 8° ? **6**

(ii) In the relation $s = at + bt^2$, where a and b are constants, $s = 184$ when $t = 1$, and $s = 400$ when $t = 2\frac{1}{2}$; evaluate a and b. Hence find the values of t when $s = 264$. **5, 5**

1959
SCOTTISH LEAVING CERTIFICATE EXAMINATION

MATHEMATICS

HIGHER GRADE—(FIRST PAPER)

Monday, 9th March—9.30 A.M. to 11.30 A.M.

Before attempting to answer any question, candidates should read the whole of it very carefully, since time is often lost through misapprehension as to what is really required.

All the figures should be neatly drawn, and, where it is necessary to turn over a page during the answer to a question, a rough copy of the figure MUST be drawn on the fresh page. All the steps of the proofs must be given, and it should be clearly shown on what assumptions the demonstrations are based. Where geometrical references are necessary, care should be taken to ensure that such references are clear and intelligible; textbook reference numbers should NOT be used.

Square-ruled paper and four-place mathematical tables are provided.

Marks will be deducted for careless or badly arranged work.

The value attached to each question, or to each part of a question, is shown in the margin.

[TURN OVER

SECTION I

All the questions in this Section should be attempted.

Marks

1. Prove that the altitudes of a triangle are concurrent. **12**

2. Prove that, if one side of a triangle is divided externally in the ratio of the other two sides, the straight line joining the point of division to the opposite vertex is the external bisector of the angle at that vertex. **10**

3. Prove that, in a triangle ABC, $a = 2R \sin A$, where R is the radius of the circumcircle of the triangle, considering the cases where angle A is (i) acute; (ii) obtuse. **6**

The acute-angled triangle ABC is inscribed in a circle. On the opposite side of AC from B, AD is drawn to make angle CAD equal to angle CAB and to meet the tangent at C to the circle ABC in D. If the radii of the circles BCD and BAD are R_1 and R_2 respectively, show that $R_1 = 2R_2 \cos BAC$. **6**

4. Establish the formula for the gradient of the straight line joining the points (x_1, y_1) and (x_2, y_2). **5**

The points A, B, and C have coordinates $(-2, -3)$, $(-4, 1)$ and $(5, -2)$ respectively. The line through C parallel to AB meets the line through A perpendicular to BC at D; find the coordinates of D. **6**

Find also the ratio in which the x-axis divides AD. **4**

SECTION II

Only THREE questions should be attempted from this Section.

Marks

5. ABCD is a parallelogram with angle BAD acute; DX is perpendicular to the diagonal AC and meets AC at X; AE is perpendicular to AB and meets XD produced at E; AD produced meets EC at Y.

Prove that

(i) D is the orthocentre of triangle EAC; **4**

(ii) C is one point of intersection of the circles ABE and XYD; **7**

(iii) the area of the circle ABE exceeds the area of the circle XYD by an area equal to that of the circle AXE. **6**

6. In the accompanying figure, O is the mid-point of the side DC of the rectangle ABCD; PM is perpendicular to AB, and $\frac{OP}{PM} = \frac{OD}{DA}$; PD produced meets AB at X.

Prove that OX bisects the angle POD externally.

(Section I, 2) **7**

If PO produced meets XC at Q, and QN is perpendicular to AB, prove that

$$\frac{OQ}{QN} = \frac{OP}{PM}.$$ **10**

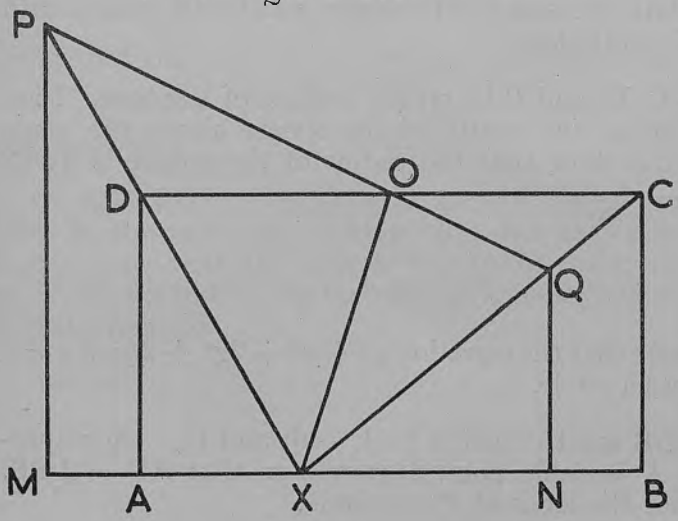

7. (*Turn over.*)

Marks

7. (*The accompanying figure should be copied into the answer book and completed.*)

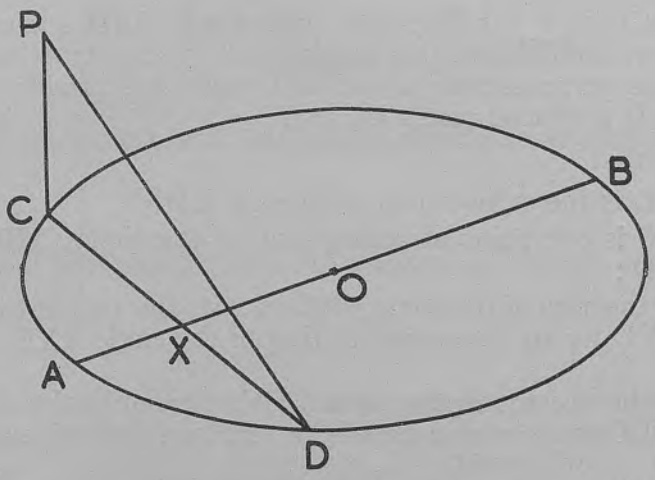

O is the centre of a horizontal circle of radius 15 inches. X is the point in a diameter AB of the circle such that AX = 6 inches. The vertical plane PCD at right angles to AB cuts AB at X and the circle at C and D ; P is the point vertically above C such that the plane PAB is at an angle of 45° to the horizontal plane.

Calculate the size of the angle which OP makes with the horizontal plane. 9

A, B, C, D, and P lie on the surface of a sphere. Find the height of the centre of the sphere above the plane ABCD and show that the radius of the sphere is $3\sqrt{29}$ inches. 8

8. Prove that the equation $x^2 + y^2 + 2gx + 2fy + c = 0$ represents a circle. 5

A and B are the points $(-1, -6)$ and $(2, -3)$ respectively. A variable point P moves so that AP = 2 PB. Show that the locus of P is a circle. 7

Find the length of the tangent from A to the circle. 5

Marks

9. In the accompanying diagram, I is the centre and r the radius of the inscribed circle of a triangle PQR. Successive circles in external contact, with centres J, K, L, . . . , and radii r_1, r_2, r_3, . . . , are drawn to touch the sides PQ and PR ; T is the point of contact of the incircle with the side PQ ; JS is drawn parallel to PQ to cut IT at S.

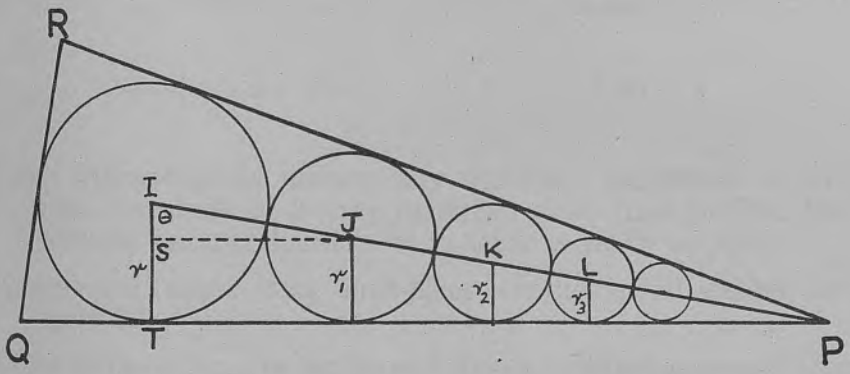

If angle PIT $= \theta$, show that $\cos\theta = \dfrac{r - r_1}{r + r_1}$, and deduce that $r_1 = r\tan^2\dfrac{\theta}{2}$. Show that the areas of the circles with centres I, J, K, . . . , are in geometric progression, that the geometric progression has a *sum to infinity*, and that this *sum* is $\dfrac{A}{1 - \tan^4\dfrac{\theta}{2}}$, where A is the area of the incircle. **13**

If the triangle PQR is equilateral and if circles are constructed in the same way within all three angles of the triangle, show that the *sum to infinity* of the areas of all the circles, excluding the incircle, is three-eighths of the area of the incircle. **4**

S

B

S

A

M
T

ex

1959
SCOTTISH LEAVING CERTIFICATE EXAMINATION

MATHEMATICS

HIGHER GRADE—(SECOND PAPER)

Monday, 9th March—1.0 P.M. to 3.30 P.M.

Before attempting to answer any question, candidates should read the whole of it very carefully, since time is often lost through misapprehension as to what is really required.

Square-ruled paper and four-place mathematical tables are provided.

All the working must be legible and shown in its proper position in the answer, and the different steps should be clearly indicated.

Marks will be deducted for careless or badly arranged work.

The value attached to each question, or to each part of a question, is shown in the margin.

SECTION I

All the questions in this Section should be attempted.

Marks

1. (i) Factorize $4(x^2y^2 - 9) + 16x^2 - 9y^2$. **4**

(ii) From the relation

$$V = E\left[1 - \frac{R}{\sqrt{(R^2 + \omega^2 L^2)}}\right],$$

express R^2 in terms of E, V, ω, and L. **5**

[TURN OVER

Marks

2. (i) Simplify the expression

$$x^{-\frac{1}{2}}(3x-1)^{\frac{2}{3}} + 4x^{\frac{1}{2}}(3x-1)^{-\frac{1}{3}},$$

and find the value of x for which it is zero. 5

(ii) If $a = 3 \cdot 8$ and $b = 0 \cdot 12$, calculate, correct to three significant figures, the value of a^{-b}. 6

(iii) Find the values of x such that

$$\log_x (9x^2 - 26x + 24) = 3.$$ 5

3. (i) Differentiate with respect to x

$$(a)\left(2x^{\frac{1}{2}} - \frac{1}{x^3}\right)^2; \quad (b)\ \frac{1}{\sqrt{(4-3x)}}.$$ 4, 2

(ii) If $\dfrac{dy}{dx} = 4x - \dfrac{2}{x^2}$ and if $y = 6$ when $x = 2$, express y in terms of x. 4

4. (i) The length, breadth, and height of a rectangular block are as $6:3:2$, and the diagonals of the block are each of length 3 feet 6 inches. Find the dimensions of the block. 5

(ii) Show that the coordinates of the point which divides the line joining L $(-\tan\beta, \tan\beta)$ and M $(\tan\alpha, \tan\alpha)$ in the ratio $\cos\alpha : \cos\beta$ are $[\tan\frac{1}{2}(\alpha-\beta), \tan\frac{1}{2}(\alpha+\beta)]$, and verify that, if $\alpha = 3\beta$, these coordinates satisfy the equation

$$y = \frac{2x}{1-x^2}.$$ 7

5. Prove that, in any triangle ABC,

$$\tan\tfrac{1}{2}(B-C) = \frac{b-c}{b+c}\tan\tfrac{1}{2}(B+C).$$ 4

Two of the sides of a triangle are of lengths $5 \cdot 3$ inches and $4 \cdot 76$ inches and the angles opposite these sides differ by $20°$. Find the sizes of the angles of the triangle. 6

Find also the area of the circumcircle of the triangle. 4

(Take $\pi = 3 \cdot 142$.)

Marks

6. (i) The current i in part of a certain electrical circuit is determined by a variable resistance r, where i and r are related by the equation

$$i = \frac{1}{r} + \frac{4}{2 - r}.$$

Find the positive value of r for which i has a turning value and determine the nature of this turning value. **6**

(ii) The graph of a cubic function of x is shown below for a limited range of values of x.

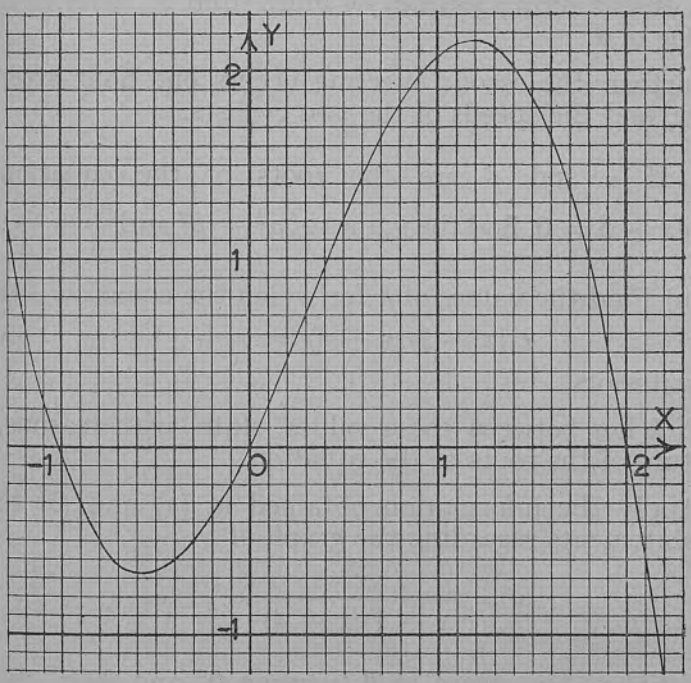

Find, from the graph,

(*a*) the maximum turning value of the function ;

(*b*) the range of values of x for which the function is increasing ;

(*c*) the range of values of x for which, approximately, the value of the function is directly proportional to x. **5**

7. (*Turn over.*)

SECTION II

Only TWO questions should be attempted from this Section.

Marks

7. Two towns M and N are d miles apart. A cyclist starts from M and travels to N and back to M at a uniform speed of x miles per hour, without stopping; a second cyclist starts simultaneously from N and travels to M and back at a uniform speed of kx miles per hour, without stopping.

If the cyclists meet first 5 miles from M and later, when each is on the return journey, 4 miles from N, determine the value of d.

If, further, the second meeting occurs one hour after the first, find the speeds of the two cyclists. **14**

8. (i) If α and β are the roots of the equation $2x^2 + 4x + 5 = 0$, find the values of $\alpha^2 + \beta^2$ and $\frac{\alpha^3}{\beta} + \frac{\beta^3}{\alpha}$. **4**

(ii) (*a*) Find the values of k for which the equation

$$k\,(x + 1)(x + 4) = x$$

has equal roots. **3**

(*b*) If k lies between these values, state, with reasons, the nature of the roots of the equation. **3**

(*c*) Apply the information obtained in (*a*) and (*b*) to make statements regarding the graph of

$$y = \frac{x}{(x + 1)(x + 4)}\,.$$ **4**

9. (i) Solve, for values of θ between 0° and 360°, the equation

$$4 \sin \theta + 1 = \cos 2\theta\,(6 \sin \theta - 11)\,.$$ **6**

(ii) If $Mg \cos (\alpha - 45°) + F \cos (\alpha + 45°) = 0$, show that $F = \frac{Mg\,(\tan \alpha + 1)}{\tan \alpha - 1}$. **3**

(iii) Establish the identity

$$\frac{\sec 4\beta - 1}{\sec 2\beta - 1} = \frac{\tan 4\beta}{\tan \beta}\,.$$ **5**

Marks

10. (i) If y is the sum of two parts one of which varies directly as x, and the other of which varies inversely as x, and if y has a turning value of 12 when $x = 2$, express y in terms of x. **6**

(ii) The finite area enclosed by the parabolas $y = 1 + x^2$ and $y = 9 - x^2$ is revolved once round the x-axis. Show that the volume of the solid so formed is $\frac{640\pi}{3}$ cubic units. **8**

S

P

M

S

M

T

1959

SCOTTISH LEAVING CERTIFICATE EXAMINATION

ELEMENTARY ANALYSIS

ADDITIONAL MATHEMATICAL SUBJECT

Wednesday, 11th March—9.15 A.M. to 11.45 A.M.

Before attempting to answer any question, candidates should read the whole of it very carefully, since time is often lost through misapprehension as to what is really required.

Not more than **FOUR** questions should be attempted from Section I, and not more than **TWO** questions from Section II.

Square-ruled paper and four-place mathematical tables are provided.

Marks will be deducted for careless or badly arranged work.

The value attached to each question, or to each part of a question, is shown in the margin.

[TURN OVER

SECTION I

Not more than FOUR questions should be attempted from this Section.

Marks

1. (i) Solve the equation

$$\sqrt{(3x-5)} - \sqrt{(2x+3)} + 1 = 0,$$

in which the positive square roots are to be taken. 7

(ii) Express as a product of factors the determinant

$$\begin{vmatrix} a & a^2 & b+c \\ b & b^2 & c+a \\ c & c^2 & a+b \end{vmatrix}.$$ 8

2. (i) Prove that, if $\tan^2 \alpha + \tan^2 \beta = 1$, then

$$(1 + 3\cos 2\alpha)(1 + 3\cos 2\beta) = 4.$$ 4

(ii) Eliminate θ from the equations

$$x \operatorname{cosec} \theta + y \cot \theta = a,$$
$$x \operatorname{cosec} \theta - y \cot \theta = b.$$ 4

(iii) Solve the equation

$$\cos x - \sin x = \cos 3x - \sin 3x,$$

giving the general solutions. 7

3. (i) Find the limits between which, for real values of x, the function

$$\frac{x^2+4}{4x+15}$$ 6

cannot lie.

(ii) Find the range of values of x for which the series

$$(x+1) + \frac{(x+1)^2}{x} + \frac{(x+1)^3}{x^2} + \cdots$$

has a sum to infinity. 5

(iii) Find the sum of n terms of the series

$$3.5 + 5.7 + 7.9 + 9.11 + \cdots.$$ 4

Marks

4. (i) Differentiate the following functions with respect to x :—

$$(a)\ \log_e(\sec x + \tan x)\ ; \quad (b)\ \sin^{-1}\left(\frac{x}{\sqrt{(1+x^2)}}\right).$$ **3, 5**

(ii) Prove that, if $y = e^{-3x}\cos 4x$, then

$$\frac{dy}{dx} = -5\,e^{-3x}\cos(4x - \alpha),$$

where $\tan\alpha = \frac{4}{3}$ and $0 < \alpha < \frac{\pi}{2}$.

Hence deduce, without further differentiation, the expressions for $\frac{d^2y}{dx^2}$ and $\frac{d^ny}{dx^n}$. **7**

5. Find, within the range $0 \leqslant x \leqslant 2\pi$, the co-ordinates of the turning points of the curve whose equation is

$$y = \frac{2\sin x}{2 + \sin x + \cos x},$$

and determine the nature of each turning point. **10**

Find the gradients at the points where $x = 0$ and $x = \pi$, and sketch the curve for the range $0 \leqslant x \leqslant 2\pi$. **5**

SECTION II

Not more than TWO questions should be attempted from this Section.

6. (i) Discuss, for all real values of x, the convergence of the series

$$\frac{2x}{1.3.4} + \frac{3x^2}{2.4.5} + \frac{4x^3}{3.5.6} + \cdots.$$ **6**

(ii) Express $E \equiv \frac{3x+1}{(x+2)(x^2+1)}$ in partial fractions. **6**

Hence prove that, if x is so large that $x^{-6}, x^{-7}, \ldots$ can be neglected, then

$$E = \frac{1}{x^5}(3x^3 - 5x^2 + 7x - 15).$$ **8**

7. (*Turn over.*)

Marks

7. Integrate the following functions with respect to x :—

(i) $\dfrac{x+7}{3x^2-8x-3}$, where $x > 3$; (ii) $x \sin^2 x$; **5, 5,**

(iii) $\dfrac{x^3}{\sqrt{(1+x^2)}}$. 4

By means of the substitution $x = a\cos^2\theta + b\sin^2\theta$, prove that, if $b > a$,

$$\int_a^b \frac{x\,dx}{\sqrt{(x-a)(b-x)}} = \frac{\pi}{2}(a+b)\,.$$ 6

8. (i) The freedom equations of a curve are

$$x = \frac{2t}{t^2+1}, \quad y = \frac{t^2+t}{t^2+1}.$$

Prove that the tangent at the origin does not cut the curve again. 8

(ii) Calculate the area enclosed by the curves $y^2 = 2x$ and $2y^2 = x^3$. Find also the volume of the solid formed by rotating this area about the y-axis through four right angles. 12

9. (i) State and prove De Moivre's theorem for a positive integral index. 5

(ii) Find the modulus and amplitude of

$$\frac{(1+i)^2}{1-i\sqrt{3}}.$$ 7

(iii) Find the roots of the equation $z^4 + 16 = 0$, and *verify* that the sum of the cubes of the roots is zero. 8

1959
SCOTTISH LEAVING CERTIFICATE EXAMINATION

GEOMETRY

ADDITIONAL MATHEMATICAL SUBJECT

Monday, 16th March—10.0 A.M. to 12 NOON

Before attempting to answer any question, candidates should read the whole of it very carefully, since time is often lost through misapprehension as to what is really required.

Not more than **FIVE** questions should be attempted, of which **TWO** should be chosen from Section I, **TWO** from Section II, and a **FIFTH** from **EITHER** Section.

Where geometrical references are necessary in written proofs, care should be taken to ensure that such references are clear and intelligible. Textbook reference numbers should **NOT** be used.

Marks will be deducted for careless or badly arranged work.

The value attached to each question, or to each part of a question, is shown in the margin.

[TURN OVER

SECTION I

Marks

1. Establish the formula for the area of the triangle OAB, where O is the origin and A and B are the points (x_1, y_1) and (x_2, y_2) respectively ; state the formula for the area of the triangle ABC, where C is the point (x_3, y_3). **6**

A and B are the points (1, 2) and (— 3, 0) respectively, and a point P moves so that the area of the triangle PAB is, in magnitude, λ times the area of the triangle OAP, where λ is a constant. Show that the complete locus of P consists of two straight lines through A. **7**

Determine the value of λ for which these lines are perpendicular, and verify that the lines are then the bisectors of the angle OAB. **7**

2. Prove that, if Q lies on the polar of P with respect to a circle, then P lies on the polar of Q. **5**

(i) Find the equation of the polar of the point L (6, — 3) with respect to the circle

$$x^2 + y^2 - 2x + 4y = 0.$$

Verify that L lies on the line $2x + 5y + 3 = 0$, and hence or otherwise find the coordinates of the pole, M, of this line with respect to the given circle. **8**

(ii) If A (4, 3) and B (— 2, 6) are vertices of a triangle ABC which is self-polar with respect to a certain circle whose centre is at the origin, find the coordinates of C. **7**

3. Prove that the equation of the chord joining the points P $(ap^2, 2ap)$, Q $(aq^2, 2aq)$ on the parabola $y^2 = 4ax$ is

$$2x - (p + q)\,y + 2apq = 0.$$ **4**

Marks

On the parabola $y^2 = 4ax$, with vertex at O, the points P $(ap^2, 2ap)$ and Q $(aq^2, 2aq)$ are taken so that OP subtends a right angle at Q. Prove that

$$q^2 + pq + 4 = 0.$$ **4**

Hence or otherwise prove that, if p is numerically greater than 4, the circle on OP as diameter cuts the parabola again in two real points. Prove also that the line joining these points meets the axis of the parabola in a fixed point, independent of the position of P on the parabola, and find the coordinates of this point. **5, 7**

4. A point P (x_1, y_1) is taken in the first quadrant on the ellipse $\frac{x^2}{a^2} + \frac{y^2}{b^2} = 1$. If S is the focus $(ae, 0)$, establish the result $SP = a - ex_1$. **4**

S′ is the second focus, and the internal bisector of the angle S′PS meets S′S in U. Prove that U is the point $(e^2x_1, 0)$. **6**

Using the formula $r = \frac{\Delta}{s}$ (which need not be proved), or otherwise, prove that the radius of the incircle of triangle S′PS is $\frac{ey_1}{1+e}$, and deduce that, when $e = \frac{1}{2}$, **5**

the line joining the incentre and the centroid of the triangle S′PS is parallel to S′S. **5**

5. Prove that the equation of the normal to the rectangular hyperbola $xy = c^2$ at the point $\left(ct, \frac{c}{t}\right)$ is

$$t^3x - ty = c(t^4 - 1).$$ **5**

The tangent at a point P on the rectangular hyperbola $xy = c^2$ meets the coordinate axes at A and B, and the normal at P meets the axes of the hyperbola at C and D. Prove that ACBD is a square. **15**

6. (*Turn over.*)

SECTION II

Marks

6. Prove that, if a transversal cuts the sides BC, CA, AB of a triangle ABC at L, M, N respectively, then

$$\frac{BL}{LC} \cdot \frac{CM}{MA} \cdot \frac{AN}{NB} = -1.$$ 7

D is a point in the base BC of a triangle ABC ; M is the mid-point of AD, and CM is produced to meet AB in P. Prove that

$$\frac{BP}{PA} = \frac{BC}{DC}.$$ 4

PQ is drawn parallel to AD to meet BD in Q ; DE is drawn parallel to CA to meet AB in E. Prove that AQ bisects DE. 9

7. If two conjugate rays of a pencil bisect the angles between the other two rays, prove that the pencil is harmonic. 6

ABC is an isosceles triangle, right-angled at A ; D is the foot of the perpendicular from A to BC ; P is a point in BC ; the diameter DQ of the circle ADP cuts AB and AC in L and M respectively.

Prove that (i) L and M are inverse points with respect to the circle ADP ; 7

(ii) the tangent at A to the circle ADP bisects LM. 7

8. The incircle of a triangle ABC touches the sides BC, CA, and AB at X, Y, and Z respectively ; YZ meets BC at X′. Prove that X and X′ harmonically separate B and C, and that the circle on XX′ as diameter is orthogonal both to the incircle and to the circumcircle of the triangle ABC. 6, 7

If ZX meets CA at Y′ and XY meets AB at Z′, prove that the circles on XX′, YY′ and ZZ′ as diameters are coaxal. 7

Marks

9. A tetrahedron VABC is such that VA, VB, and VC are mutually perpendicular; L is the foot of the perpendicular from V to AC. By expressing the sides of the triangle ALB in terms of VA, VB, and VL, or otherwise, show that the angle ALB is a right angle. **6**

Prove that the normal from V to the plane ABC meets the plane in the orthocentre, H, of the triangle ABC. **8**

Prove also that the spheres on BC, CA, and AB as diameters meet in V and in a second point lying on the line VH. **6**

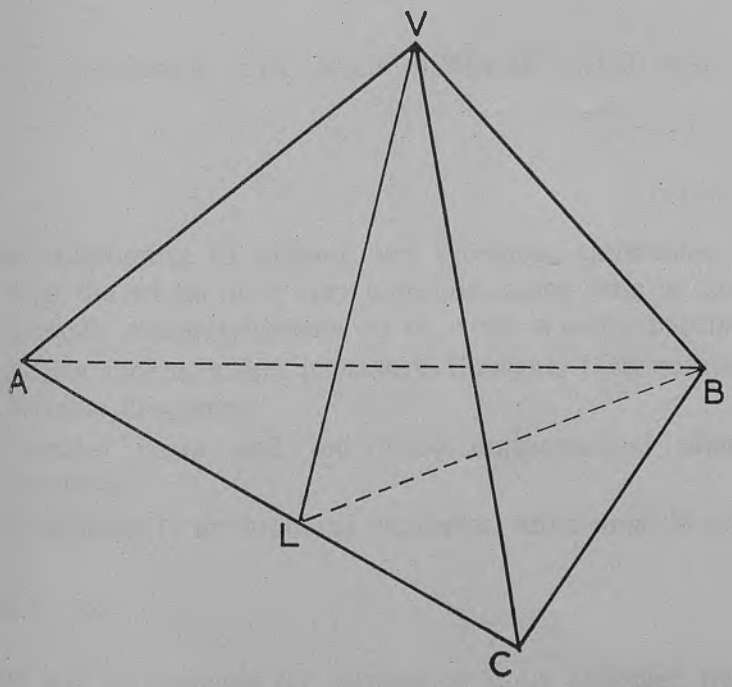

(*The accompanying figure should be copied into the answer book and completed.*)

S

Be

Ca

Sq

In

Ta

Ma

Th

1959
SCOTTISH LEAVING CERTIFICATE EXAMINATION

DYNAMICS

ADDITIONAL MATHEMATICAL SUBJECT

Wednesday, 18th March—1.30 P.M. to 3.30 P.M.

Before attempting to answer any question, candidates should read the whole of it very carefully, since time is often lost through misapprehension as to what is really required.

Candidates should, where necessary, illustrate their solutions by suitable diagrams.

Square-ruled paper and four-place mathematical tables are provided.

In the answers to arithmetical examples, units must be stated.

Take $g = 32$.

Marks will be deducted for careless or badly arranged work.

The value attached to each question, or to each part of a question, is shown in the margin.

[TURN OVER

SECTION I

All the questions in this Section should be attempted.

Marks

1. The sides of a regular hexagon ABCDEF are at a distance of 1 foot from the centre, O, of the hexagon. Forces of 2 lb. wt., 3 lb. wt., 4 lb. wt., and 5 lb. wt. act along the sides AB, BC, CD, and DE respectively, the direction of the forces being indicated by the order of the letters. Find in magnitude and direction the resultant of the forces ; determine the distance from O of the line of action of the resultant, and show in a diagram, which need not be drawn to scale, the position of the resultant relative to the hexagon. 11

A force, acting along the side FA, is added to the system so that the resultant is now a couple ; find the moment of this couple. 4

2. Two scale-pans, each of mass 1 lb., are connected by a light inextensible cord passing over a smooth weightless pulley so that the parts of the cord not in contact with the pulley are vertical. Masses of 5 lb. and 9 lb. respectively are placed in the pans ; find the resulting acceleration and the tension in the cord. 7

Determine also, in magnitude and direction the reaction of each scale-pan upon the mass it contains. If the cord were to break, what would these reactions become ? 8

3. Define momentum, kinetic energy. 2

A package, moving horizontally at 1 foot per second, is placed upon a conveyor belt which is moving horizontally in the same direction as the package at 5 feet per second. If the coefficient of friction between the package and the belt is $\frac{1}{4}$, find the time which elapses before slipping ceases. 5

If the package weighs 2 cwt., find the total work done upon it by the belt, and determine what percentage of this work is employed usefully. 8

Marks

4. (i) A particle moves in a straight line with a variable acceleration. If the initial velocity of the particle is 24 feet per second and the acceleration, after the particle has been in motion for t seconds, is $3t^2$ feet per second per second, how far will the particle be from its starting point when it has attained a velocity of a mile per minute ? **6**

(ii) A particle, moving in a straight line, starts from rest and travels a certain distance with a uniform acceleration of $2f$ feet per second per second. It then travels a further distance with a uniform acceleration of f feet per second per second, and during this second stage it increases its velocity by 25 per cent. If the total distance travelled is 850 feet and the total time taken is 1 minute, find f and the final velocity. **9**

SECTION II

Only TWO questions should be answered from this Section.

5. (i) A uniform sheet of metal is in the form of an equilateral triangle ABC with altitudes of length 12 inches ; M and N are the mid-points of AB and AC respectively. The sheet is bent about MN till the plane of the triangle AMN is perpendicular to the plane BCNM. Find the distances of the centre of gravity from the planes AMN and BCNM. **9**

(ii) An open hollow cone of height h and radius a is made of uniform thin sheet metal. Show that the distance of the centre of gravity from the vertex of the cone is $\frac{2h}{3}$. **7**

The cone is closed by attaching a disc of radius a made from the same sheet metal. Show that the distance from the base of the centre of gravity of the closed cone is

$$\frac{h\sqrt{(h^2 + a^2)}}{3[a + \sqrt{(h^2 + a^2)}]}.$$ **4**

Marks

6. Find the range, on a horizontal plane through the point of projection, of a projectile which is fired with velocity V feet per second at an angle α to the horizontal. Determine also the greatest height attained by the projectile. 8

A projectile is fired in two stages. In the first, the whole projectile is fired with velocity V feet per second at angle α to the horizontal. When the projectile has reached its highest point, it explodes into two parts in such a way that one part, consisting of three-quarters of the mass of the projectile, returns to the point of projection by the same path as it ascended. Find the range, on a horizontal plane through the point of projection, of the remaining quarter of the projectile. 12

7. (*a*) On a rough plane inclined at an angle of 30° to the horizontal, a mass of 10 lb. is just about to move *up* a line of greatest slope under the action of a force acting parallel to the plane. If the coefficient of friction between the mass and the plane is $0 \cdot 2$, find the magnitude of the force. 5

(*b*) If the mass is just about to move *up* the same plane in a direction inclined at 45° to the line of greatest slope under the action of a force acting parallel to the plane, find the magnitude of this force and calculate the angle which the line of action makes with the line of greatest slope. 15

8. (i) A particle P is describing a horizontal circle of diameter 1 foot uniformly at 180 revolutions per minute; a second particle Q is describing a concentric horizontal circle of diameter 4 feet uniformly in the same direction at 120 revolutions per minute. At a given instant P and Q are at points A and B collinear with, and on the same side of, the centre of the circles. Show that the magnitude of the velocity of Q relative to P one-sixth of a second later is 7π feet per second, and determine the angle which this relative velocity makes with AB. 10

(ii) Define simple harmonic motion.

A particle moving in simple harmonic motion has a velocity of 8 feet per second and an acceleration of 12 feet per second per second when it is 3 feet from the centre of oscillation. Find the period and amplitude of the motion. 6

Find also the velocity of the particle a quarter of a second after it has passed through an extreme position. 4

1959
SCOTTISH LEAVING CERTIFICATE EXAMINATION

LATIN

LOWER GRADE

Friday, 13th March—9.15 A.M. to 11.45 A.M.

N.B.—Begin the answer (or fair copy of an answer) to each question on a fresh page.

Marks will be deducted for bad spelling and bad punctuation, and for writing that is difficult to read.

The value attached to each question, or to each part of a question, is shown in brackets in the margin.

[TURN OVER

Marks

1. Translate into English :—

Either (*a*) **or** (*b*)

(*a*) **King Agesilaus checks the attempted desertion of some young Spartans by pretending to commend their action and sending some of his own men to join them.**

Agesilaus, cum Epaminondas Spartam oppugnaret, essetque sine muris oppidum, talem se imperatorem praebuit ut eo tempore omnibus apparuerit, nisi ille fuisset,[1] Spartam futuram non fuisse. in quo quidem discrimine celeritas eius consilii saluti fuit omnibus. nam cum quidam adulescentes, hostium adventu perterriti, ad Thebanos transfugere vellent et locum extra urbem editum[2] cepissent, Agesilaus, qui perniciosissimum fore videret, si animadversum esset quemquam ad hostes transfugere conari, cum suis eo venit ; atque, ut si bona fide fecissent, laudavit consilium eorum quod eum locum occupassent. sic adulescentes simulata laudatione recuperavit[3] et, comitibus de suis adiunctis, locum tutum reliquit. namque illi, additis nonnullis qui expertes[4] erant consilii, commovere se inde non sunt ausi.

(1) esse = to exist.
(2) editus = altus.
(3) recuperare = to win over again.
(4) expers, —tis = ignorant of.

(28)

(*b*) **Having vainly begged Minos for release from exile, Daedalus plans to escape by the air.**

" Sit modus[1] exilio," dixit, " iustissime Minos ;
accipiat cineres terra paterna meos.
et quoniam in patria, fatis agitatus iniquis,
vivere non potui, sit mihi posse mori."
dixerat haec : sed et haec et multo plura licebat
dicere : regressum non dabat ille viro.
quod simul ac sensit, " nunc, o ! nunc, Daedale," dixit,
" materiem,[2] qua sis ingeniosus, habes.
possidet en terras, et possidet aequora Minos :
nec tellus nostrae nec patet unda fugae.
restat iter caelo : caelo temptabimus ire :
da veniam[3] coepto, Iuppiter alte, meo."

(1) modus = end.
(2) materies = means, opportunity.
(3) venia = favour.

(28)

Marks

2. Translate into English :—

Two of Caesar's Gallic officers, accused of embezzling the cavalry's pay, are censured and decide to change sides.

Erant apud Caesarem ex equitum numero Allobroges duo fratres, Raucillus et Egus, Adbucilli filii, qui principatum in civitate multos annos obtinuerat, singulari virtute homines, quorum opera[1] Caesar omnibus Gallicis bellis optima erat usus. his domi ob has causas magistratus mandaverat, agrosque in Gallia ex hostibus captos praemiaque rei pecuniariae magna tribuerat. hi propter virtutem non solum apud Caesarem in honore erant sed etiam apud exercitum cari habebantur; sed freti[2] amicitia Caesaris, et stulta ac barbara arrogantia elati, despiciebant suos stipendiumque equitum fraudabant. quibus rebus permoti equites omnes Caesarem adierunt palamque de eorum iniuriis sunt questi. Caesar, non tempus illud poenae existimans, rem totam distulit,[3] sed illos secreto castigavit. itaque pudore simul et timore adducti, discedere a nobis et novam temptare fortunam novasque experiri amicitias constituerunt.

[1] opera (fem. sing.) = services.

[2] fretus with abl. case = relying on.

[3] differre = to postpone a decision about.

(34)

3. Translate into Latin :—

(1) We could not understand why they had stayed in Rome. **(3)**

(2) No one will believe that Sulla will arrive in five days. **(3)**

(3) I had persuaded the general to set free all the citizens. **(3)**

(4) If Antony delays, the Romans will forget his victories. **(3)**

(5) Surely they are not so foolish as to wish to appoint him consul ? **(4)**

(6) Since it is now summer, let us go to the country at once. **(4)**

4. (*a*) Give the second person singular of the present subjunctive of : malle, proficisci, fieri, prodesse, morari, adire. **(3)**

(*b*) Give the ablative singular of opus, vis, dulcis and the genitive singular of senex, cornu, uter. **(3)**

(*c*) Use **two** of the following Latin phrases in English sentences : in loco parentis, ex tempore, ad hoc, modus operandi. **(2)**

5. (*Turn over*).

Marks

5. (*a*) Write two sentences each about **two** of the following :—

Q. Fabius Maximus, M. Licinius Crassus, Ovid's Metamorphoses, Hadrian's Wall. (4)

(*b*) Give the name of the goddess associated with the moon.

Give the name of the road that led from Rome to the south-east of Italy.

Give the name of the garment which Roman boys wore over their tunic until attaining manhood.

Give the name of the magistrate responsible for organizing the public games at Rome.

Give the name of a Roman writer of comedy.

Place the following events in chronological order, placing the earliest first :—the sack of Rome by the Gauls, the battle of Mons Graupius, the destruction of Carthage. (3)

(*c*) In about fifty or sixty words tell what you know about any **one** of the following :—the disaster at the Caudine Forks ; the education of a Roman boy ; a Roman camp. (3)

1959
SCOTTISH LEAVING CERTIFICATE EXAMINATION

LATIN

HIGHER GRADE—(FIRST PAPER)

Friday, 13th March—9.15 A.M. to 11.45 A.M.

N.B.—Begin the answer (or fair copy of an answer) to each question on a fresh page.

Marks will be deducted for bad spelling and bad punctuation, and for writing that is difficult to read.

The value attached to each question, or to each part of a question, is shown in brackets in the margin.

Translate into English :— *Marks*

1. The speaker recalls how Regulus, contrary to his apparent advantage, persuaded the senate not to agree to an exchange of prisoners with the Carthaginians.

M. Atilius Regulus, cum consul iterum in Africa ex insidiis captus esset, duce Xanthippo Lacedaemonio, imperatore autem patre Hannibalis Hamilcare, iuratus missus est ad senatum, ut, nisi redditi essent Poenis captivi nobiles quidam, rediret ipse Carthaginem. is cum Romam venisset, utilitatis speciem videbat ; sed eam, ut res declarat, falsam iudicavit. itaque quid fecit ? in senatum venit ; mandata exposuit ; sententiam ne diceret recusavit ; quamdiu iureiurando hostium teneretur, non esse se senatorem. atque illud etiam (" o stultum hominem," dixerit quispiam, " et repugnantem utilitati suae ! ") reddi captivos, negavit esse utile ; illos enim adulescentes esse et bonos duces, se iam confectum senectute. cuius cum valuisset auctoritas, captivi retenti sunt ; ipse Carthaginem rediit ; neque eum caritas patriae retinuit nec suorum. neque vero tum ignorabat se ad crudelissimum hostem et ad exquisita supplicia proficisci ; sed iusiurandum conservandum putabat. itaque tum, cum vigilando[1] necabatur, erat in meliore causa quam si domi senex captivus, periurus consularis remansisset.

[1] vigilando = by enforced sleeplessness. **(42)**

[TURN OVER

Marks

2. Nisus and Euryalus set out from the beleaguered Trojan camp to penetrate the enemy lines and bring word of the danger to Aeneas.

protinus armati incedunt ; quos omnis euntes
primorum manus ad portas, iuvenumque senumque,
prosequitur votis. nec non et pulcher Iulus,
ante annos animumque gerens[1] curamque virilem,
multa patri mandata dabat portanda ; sed aurae
omnia discerpunt[2] et nubibus irrita donant.
egressi superant fossas noctisque per umbram
castra inimica petunt, multis tamen ante futuri
exitio. passim somno vinoque per herbam
corpora fusa vident, arrectos litore currus,
inter lora rotasque viros, simul arma iacere,
vina simul. prior Hyrtacides sic ore locutus :
" Euryale, audendum dextra : nunc ipsa vocat res.
hac iter est. tu, ne qua manus se attollere nobis
a tergo possit, custodi et consule longe ;
haec ego vasta dabo[3] et lato te limite[4] ducam."
sic memorat vocemque premit, simul ense superbum
Rhamnetem aggreditur.

(1) animum gerere = to display spirit.
(2) discerpere = to scatter.
(3) vasta dabo = vastabo.
(4) limes = path (cut through the enemy). (37)

Scan the first three lines of the above passage, marking the principal caesura in each line. (3)

3. Influenced by the pleas of Bomilcar, Jugurtha makes overtures to the Romans, but soon, fearing for his own safety, renews the war.

Bomilcar, ubi primum opportunum fuit, Iugurtham accedit ; monet atque lacrimis obtestatur ut aliquando sibi liberisque et genti Numidarum, optime merenti, provideat : omnibus proeliis sese victos, agrum vastatum, regni opes comminutas[1] esse ; satis saepe iam et virtutem militum et fortunam temptatam ; caveat ne illo cunctante Numidae sibi consulant. his verbis ad deditionem regis animum impellit. mittuntur ad imperatorem legati qui Iugurtham imperata facturum dicerent. Metellus propere cunctos senatorii ordinis ex hibernis arcessi iubet : eorum atque aliorum, quos idoneos ducebat, consilium[2] habet. ita more maiorum ex consilii decreto per legatos Iugurthae imperat argenti pondo[3] ducenta milia, elephantos omnes, equorum et armorum aliquantum. quae postquam sine mora facta sunt, Iugurtha, ubi armis et pecunia spoliatus est, rursus coepit flectere animum suum, et ex mala conscientia digna timere. denique multis diebus per dubitationem consumptis, de integro bellum sumit.

(1) comminuere = to diminish.
(2) consilium = council of war.
(3) pondo (indeclinable noun) = pounds. (38)

1959

SCOTTISH LEAVING CERTIFICATE EXAMINATION

LATIN

HIGHER GRADE—(SECOND PAPER)

Friday, 13th March—1.0 P.M. to 3.0 P.M.

N.B.—Begin the answer (or fair copy of an answer) to each question on a fresh page.

Marks will be deducted for writing that is difficult to read.

The value attached to each question, or to each part of a question, is shown in brackets in the margin.

1. Translate into Latin :— *Marks*

For a long time the citizens of Palmyra resisted the Romans with the greatest valour. At length, when the city had been besieged for many months, there was so great a scarcity of food that many perished of hunger. The Persian king had promised to send help, provided that Zenobia, the queen of Palmyra, would marry him. Overcome by pity for the citizens, she decided to do as he wished, and escaping from the city in the middle of the night with two companions, she set off for the river Euphrates, which is the boundary of the Persian kingdom. Her plan, however, had been betrayed to the Roman commander by a slave who had been bribed to inform the enemy secretly of the queen's intentions. A squadron of cavalry was immediately sent to pursue the fugitives. They overtook the queen at the very moment when she and her friends had found a boat in which to cross the river, and brought them back to the Roman camp. **(50)**

[TURN OVER

2. Translate into Latin :— *Marks*

(1) We shall never know how he got possession of the gold. (3)

(2) If you had heard him speaking, you would have thought that he was born here. (4)

(3) There was no doubt that he was justly condemned, but many pitied him. (4)

(4) They were an object of hatred to the citizens, not because they were proud, but because they were very cruel. (4)

(5) I am afraid that he will threaten not to spare the women and children. (4)

(6) Labienus advised Caesar to attack before the enemy could recover from their panic. (4)

3. (*a*) Give the second person plural of the imperfect subjunctive of : hortari, nolle, frui, abesse, polliceri, fieri. (3)

(*b*) Give the adverbs formed from : felix, peior, minimus, bonus. (2)

(*c*) Give the Latin for :—

two thousand horsemen, far from the sea, on the 7th July, two camps. (2)

1959
SCOTTISH LEAVING CERTIFICATE EXAMINATION

GREEK

LOWER GRADE

Tuesday, 17th March—9.15 A.M. to 11.45 A.M.

N.B.—Begin the answer (or fair copy of an answer) to each question on a fresh page.

Marks will be deducted for bad spelling and bad punctuation, and for writing that is difficult to read.

The value attached to each question, or to each part of a question, is shown in brackets in the margin.

[TURN OVER

1. Translate into English :— *Marks*

(*a*) **Lucian and his friends are cordially received by the king of the moon, who explains how a quarrel arose between the inhabitants of the moon and those of the sun over a proposed colony.**

Ὁ δὲ βασιλεὺς ἡμᾶς ἰδών, "Ἕλληνες ἆρα," ἔφη, "ὑμεῖς, ὦ ξένοι;" συμφησάντων δὲ ἡμῶν, θαρρεῖν ἐκέλευσε καὶ μηδένα κίνδυνον φοβεῖσθαι· πάντα γὰρ ἡμῖν παρέσεσθαι ὧν δεόμεθα. "ἐὰν δὲ καὶ κατορθώσω[1]," ἔφη, "τὸν πόλεμον, ὃν ἐκφέρω νῦν πρὸς τοὺς τὸν ἥλιον κατοικοῦντας, ἁπάντων εὐδαιμονέστατα παρ' ἐμοὶ βιώσεσθε." καὶ ἡμεῖς ἠρόμεθα τίνες τε εἶεν οἱ πολέμιοι καὶ τὴν αἰτίαν τῆς διαφορᾶς. ὁ δέ, "Φαέθων," φησίν, "ὁ τῶν ἐν τῷ ἡλίῳ κατοικούντων βασιλεύς, πολὺν ἤδη πρὸς ἡμᾶς πολεμεῖ χρόνον. ἤρξατο δὲ ἐξ αἰτίας τοιαύτης· τῶν ἐν τῇ ἀρχῇ τῇ ἐμῇ ποτε τοὺς ἀπορωτάτους[2] συναγαγών, ἐβουλήθην ἀποικίαν ἐς τὸν Ἑωσφόρον[3] στεῖλαι, ὄντα ἔρημον καὶ ὑπὸ μηδενὸς κατοικούμενον. ὁ τοίνυν Φαέθων φθονήσας ἐκώλυσε τὴν ἀποικίαν. τότε μὲν οὖν νικηθέντες ἀνεχωρήσαμεν. νῦν δὲ βούλομαι αὖθις ἐξενεγκεῖν τὸν πόλεμον καὶ ἀποστεῖλαι τὴν ἀποικίαν. αὔριον δὲ ποιησόμεθα τὴν ἔξοδον."

[1] κατορθοῦν = to be successful in.
[2] ἄπορος = needy.
[3] Ἑωσφόρος = the Morning Star. (34)

Marks

(*b*) **Xenophon seeks to restrain his army, which has caused panic in Byzantium by bursting into the town.**

Ὁ δὲ Ξενοφῶν ὡς εἶδε τὸ στράτευμα βίᾳ εἰσπῖπτον, ἔδεισε μὴ ἐφ' ἁρπαγὴν[1] τράποιτο. οἱ δὲ Βυζάντιοι φεύγουσιν ἐκ τῆς ἀγορᾶς, οἱ μὲν εἰς τὰ πλοῖα, οἱ δὲ οἴκαδε· ὅσοι δὲ ἔνδον ἐτύγχανον ὄντες ἔξω ἔθεον· οἱ δὲ καθεῖλκον τὰς τριήρεις, ὡς ἐν ταῖς τριήρεσι σῴζοιντο· πάντες δὲ ᾤοντο ἀπολωλέναι ὡς ἑαλωκυίας τῆς πόλεως. οἱ δὲ στρατιῶται ὡς εἶδον τὸν Ξενοφῶντα, προσπίπτουσιν αὐτῷ πολλοὶ καὶ λέγουσι· "νῦν σοι ἔξεστιν, ὦ Ξενοφῶν, ἀνδρὶ γενέσθαι. ἔχεις πόλιν, ἔχεις τριήρεις, ἔχεις χρήματα, ἔχεις ἄνδρας τοσούτους. νῦν ἄν, εἰ βούλοιο, σύ τε ἡμᾶς ὀνήσειας[2] καὶ ἡμεῖς σὲ μέγαν ποιήσαιμεν." ὁ δ' ἀπεκρίνατο· "ἀλλ' εὖ τε λέγετε καὶ ποιήσω ταῦτα· εἰ δὲ τούτων ἐπιθυμεῖτε, θέσθε τὰ ὅπλα ἐν τάξει ὡς τάχιστα."

[1] ἁρπαγή = plunder.
[2] ὀνίνημι = I confer a benefit on. **(27)**

(4) 2. Translate into Greek :—

(1) In order that they might not find the ship, he sailed out during the night. **(3)**

(2) We ought to persuade them not to ransom these wicked men. **(3)**

(3) He is so good that he never speaks ill of his enemies. **(3)**

(4) Critias swore that he would accuse the generals of cowardice. **(3)**

(5) Since our leader has been killed, let us return home with all speed. **(4)**

(6) Do not be surprised if I arrive in the city within three days. **(4)**

3. (*a*) Give the third person plural of the imperfect indicative of εἰδέναι, εἶναι, ἀποθνῄσκειν and the first person singular of the present optative active of τιμᾶν, διδάσκειν, τιθέναι. **(3)**

(*b*) Give the accusative plural of πατήρ, βασιλεύς, τέλος, κύων, γόνυ, πόλις. **(3)**

(*c*) Give the Greek for :—on these conditions, the men of old, down stream, at Athens. **(2)**

4. (*Turn over.*)

Marks

4. (*a*) Write two sentences about each of the following :—the Confederacy of Delos, the oracle of Delphi. (4)

(*b*) Give the name of a famous Spartan lawgiver.

Give the name of the Greek god of the sea.

Give the name of the commander of the Greek forces at the battle of Plataea.

Give the name of the Persian king whose army was defeated at Marathon.

Give the name of the maiden who helped Theseus to kill the Minotaur.

Give the name of the chief city of Boeotia.

Give the name of a Greek lyric poet.

Give the Greek word for the assembly of the people at Athens. (4)

(*c*) In about fifty or sixty words tell what you know about **one** of the following :—

Peisistratus : Odysseus : an Athenian dramatic performance. (3)

1959
SCOTTISH LEAVING CERTIFICATE EXAMINATION

GREEK

HIGHER GRADE—(FIRST PAPER)

Tuesday, 17th March—9.15 A.M. to 11.45 A.M.

N.B.—Begin the answer (or fair copy of an answer) to each question on a fresh page.

Marks will be deducted for bad spelling and bad punctuation, and for writing that is difficult to read.

The value attached to each question, or to each part of a question, is shown in brackets in the margin.

[TURN OVER

Translate into English :— *Marks*

1. **The Thebans, fearing isolation in their struggle against Sparta, seek to embroil the Athenians with the Spartans by bribing the Spartan governor of Thespiae to attack the Piraeus.**

Οἱ μὲν οὖν Ἀθηναῖοι, ὁρῶντες τὴν τῶν Λακεδαιμονίων ῥώμην, ἐφοβοῦντο. οἱ δ' αὖ Θηβαῖοι, καὶ αὐτοὶ φοβούμενοι εἰ μηδένες ἄλλοι ἢ αὐτοὶ πολεμήσοιεν τοῖς Λακεδαιμονίοις, τοιόνδε εὑρίσκουσι μηχάνημα. πείθουσι τὸν ἐν ταῖς Θεσπιαῖς ἁρμοστὴν Σφοδρίαν, χρήματα δόντες, ὡς ὑπωπτεύετο, ἐμβαλεῖν εἰς τὴν Ἀττικήν, ἵν' ἐκπολεμώσειε τοὺς Ἀθηναίους πρὸς τοὺς Λακεδαιμονίους. κἀκεῖνος πειθόμενος αὐτοῖς, προσποιησάμενος[1] *τὸν Πειραιᾶ καταλήψεσθαι, ὅτι δὴ ἀπύλωτος*[2] *ἦν, ἦγεν ἐκ τῶν Θεσπιῶν πρῷ δειπνήσαντας τοὺς στρατιώτας, φάσκων πρὸ ἡμέρας κατανύσειν*[3] *εἰς τὸν Πειραιᾶ. Θριᾶσι*[4] *δ' αὐτῷ ἡμέρα ἐπεγένετο, καὶ οὐδὲν ἐντεῦθεν ἐποίησεν ὥστε λαθεῖν, ἀλλ' ἐπεὶ ἀπετράπετο, βοσκήματα διήρπασε καὶ οἰκίας ἐπόρθησε. τῶν δ' ἐντυχόντων τινὲς τῆς νυκτὸς φεύγοντες εἰς τὸ ἄστυ ἀπήγγελλον τοῖς Ἀθηναίοις ὅτι στράτευμα πάμπολυ προσίοι. οἱ μὲν δὴ ταχὺ ὁπλισάμενοι ἐν φυλακῇ τῆς πόλεως ἦσαν. τῶν δὲ Λακεδαιμονίων καὶ πρέσβεις Ἀθήνησιν ἐτύγχανον ὄντες· οὓς οἱ Ἀθηναῖοι, ἐπεὶ τὸ πρᾶγμα ἠγγέλθη, συλλαβόντες ἐφύλαττον, ὡς καὶ τούτους συνεπιβουλεύοντας.*

[1] *προσποιεῖσθαι* = to assert.
[2] *ἀπύλωτος* = without gates.
[3] *κατανύειν* = to arrive.
[4] *Θριᾶσι* = at Thriae. (40)

2. **The speaker declares that Athens and her democratic constitution are the main target of Philip's hostility and the chief obstacle to his plans.**

Εἰσὶν δέ τινες οἳ πρὶν ἀκοῦσαι τοὺς ὑπὲρ τῶν πραγμάτων λόγους εὐθέως εἰώθασιν ἐρωτᾶν "τί οὖν χρὴ ποιεῖν;" οὐχ ἵν' ἀκούσαντες ποιήσωσι (χρησιμώτατοι γὰρ ἂν ἦσαν ἁπάντων) ἀλλ' ἵνα τοῦ λέγοντος ἀπαλλαγῶσιν. δεῖ δ' ὅμως εἰπεῖν ὅ τι χρὴ ποιεῖν. πρῶτον μέν, ὦ ἄνδρες Ἀθηναῖοι, τοῦτο παρ' ὑμῖν αὐτοῖς βεβαίως γνῶναι, ὅτι τῇ πόλει Φίλιππος πολεμεῖ καὶ τὴν εἰρήνην λέλυκεν, καὶ κακόνους μέν ἐστι καὶ ἐχθρὸς ὅλῃ τῇ πόλει καὶ τῷ τῆς πόλεως ἐδάφει,[1] *προσθήσω δὲ καὶ τοῖς ἐν τῇ πόλει θεοῖς· οὐδενὶ μέντοι μᾶλλον ἢ τῇ πολιτείᾳ πολεμεῖ οὐδ' ἐπιβουλεύει, καὶ σκοπεῖ μᾶλλον οὐδὲν τῶν πάντων ἢ πῶς ταύτην καταλύσει. καὶ τοῦτ' ἐξ ἀνάγκης τρόπον τινὰ νῦν γε δὴ ποιεῖ. λογίζεσθε γάρ. ἄρχειν βούλεται, τούτου δ' ἀνταγωνιστὰς μόνους ὑπείληφεν*[2] *ὑμᾶς.*

Marks

ἀμφότερ' οὖν οἶδε, καὶ αὐτὸν ὑμῖν ἐπιβουλεύοντα καὶ ὑμᾶς αἰσθομένους· εὖ φρονεῖν δ' ὑμᾶς ὑπολαμβάνων μισεῖν αὐτὸν ἡγεῖται. πρὸς δὲ τούτοις τοσούτοις οὖσιν οἶδεν ἀκριβῶς ὅτι, οὐδ' ἐὰν ἁπάντων τῶν ἄλλων γένηται κύριος, οὐδὲν ἔστ' αὐτῷ βεβαίως ἔχειν, ἕως ἂν ὑμεῖς δημοκρατῆσθε.

(1) ἔδαφος = soil.
(2) ὑπολαμβάνειν = to regard, consider. **(45)**

3. **Either** (*a*) **or** (*b*).

(*a*) **Telemachus tells his mother of his journeys to Pylos and Sparta in search of news about his father.**

Τὴν δ' αὖ Τηλέμαχος πεπνυμένος ἀντίον ηὔδα·
"τοιγὰρ ἐγώ τοι, μῆτερ, ἀληθείην καταλέξω.
ὠχόμεθ' ἔς τε Πύλον καὶ Νέστορα, ποιμένα λαῶν,
δεξάμενος δέ με κεῖνος ἐν ὑψηλοῖσι δόμοισιν
ἐνδυκέως(1) ἐφίλει, ὡς εἴ τε πατὴρ ἑὸν υἱὸν
ἐλθόντα χρόνιον νέον ἄλλοθεν· ὣς ἐμὲ κεῖνος
ἐνδυκέως ἐκόμιζε(2) σὺν υἱάσι κυδαλίμοισιν.
αὐτὰρ Ὀδυσσῆος ταλασίφρονος οὔ ποτ' ἔφασκε,
ζωοῦ οὐδὲ θανόντος, ἐπιχθονίων τευ ἀκοῦσαι,
ἀλλά μ' ἐς Ἀτρείδην, δουρικλειτὸν Μενέλαον,
ἵπποισι προὔπεμψε καὶ ἅρμασι κολλητοῖσιν.
ἔνθ' ἴδον Ἀργείην Ἑλένην, ἧς εἵνεκα πολλὰ
Ἀργεῖοι Τρῶές τε θεῶν ἰότητι μόγησαν.
εἴρετο δ' αὐτίκ' ἔπειτα βοὴν ἀγαθὸς Μενέλαος
ὅττευ χρηίζων ἱκόμην Λακεδαίμονα δῖαν·
αὐτὰρ ἐγὼ τῷ πᾶσαν ἀληθείην κατέλεξα."

(1) ἐνδυκέως = attentively.
(2) κομίζειν = to take care of. **(37)**

Scan the line beginning ἐλθόντα χρόνιον and the next two lines, marking the principal caesura in each. **(3)**

Marks

(*b*) **Andromache seeks to console Hecuba for the death of her daughter Polyxena, who has been sacrificed at the tomb of Achilles.**

An. Ὦ μῆτερ ἀνδρός, ὅς ποτ' Ἀργείων δορὶ
πλείστους διώλεσ', Ἕκτορος, τάδ' εἰσορᾷς ;
τέθνηκέ σοι παῖς πρὸς τάφῳ Πολυξένη
σφαγεῖσ' Ἀχιλλέως, δῶρον ἀψύχῳ νεκρῷ.

Ek. αἰαῖ, τέκνον, σῶν ἀνοσίων προσφαγμάτων.[1]
αἰαῖ μάλ' αὖθις, ὡς κακῶς διόλλυσαι.

An. ὄλωλεν ὡς ὄλωλεν, ἀλλ' ὅμως ἐμοῦ
ζώσης γ' ὄλωλεν εὐτυχεστέρῳ πότμῳ.

Ek. οὐ ταὐτόν, ὦ παῖ, τῷ βλέπειν τὸ κατθανεῖν·
τὸ μὲν γὰρ οὐδέν, τῷ δ' ἔνεισιν ἐλπίδες.

An. ὦ μῆτερ, ὦ τεκοῦσα, κάλλιστον λόγον
ἄκουσον, ὥς σοι τέρψιν[2] ἐμβάλω φρενί.
τὸ μὴ γενέσθαι τῷ θανεῖν ἴσον λέγω,
τοῦ ζῆν δὲ λυπρῶς κρεῖσσόν ἐστι κατθανεῖν.
κείνη δ' ὁμοίως ὥσπερ οὐκ ἰδοῦσα φῶς
τέθνηκε, κοὐδὲν οἶδε τῶν αὑτῆς κακῶν.

[1] πρόσφαγμα = slaughter.
[2] τέρψις = gladness. (37)

Scan the line beginning τὸ μὴ γενέσθαι and the next two lines, marking the principal caesura in each. (3)

1959

SCOTTISH LEAVING CERTIFICATE EXAMINATION

GREEK

HIGHER GRADE—(SECOND PAPER)

Tuesday, 17th March—1.30 P.M. to 3.30 P.M.

N.B.—Begin the answer (or fair copy of an answer) to each question on a fresh page.

Marks will be deducted for writing that is difficult to read.

The value attached to each question, or to each part of a question, is shown in brackets in the margin.

1. Translate into Greek :— *Marks*

While the Athenians were attacking Chios, Chabrias served in their fleet as a private person. He had won so much esteem, however, in previous wars that the sailors were more ready to obey him than their own generals. This circumstance was the cause of his death. For when, desiring to be the first to assail the Chians, he had persuaded the commander of his ship to sail boldly into the harbour, the rest of the fleet did not follow at once. The enemy attacked the ship from every side and finally it began to sink. Chabrias could have been saved if he had cast himself into the sea ; for by this time other Athenian ships were approaching in order to rescue him. He thought, however, that it was better to perish than to throw away his arms and desert his ship. The other sailors were unwilling to follow his lead and saved themselves by swimming to the ships of their comrades. So Chabrias died overwhelmed by the enemy's spears. **(48)**

[TURN OVER

Marks

2. Translate into Greek :—

(1) Would that we had prevented them from accusing so brave a man of treachery ! (4)

(2) I am afraid that the Spartans will not retreat until we attack their city. (4)

(3) His friends did not know whether they should blame him or pity him for his misfortune. (4)

(4) Although the Corinthians considered that he was foolish, they always remembered his courage. (4)

(5) Will you not see to it that the young men promise to return home ? (4)

3. (*a*) Give the nominative singular masculine of the perfect participle active of :—*βαίνειν, εὑρίσκειν, λαμβάνειν, νομίζειν, ὀμνύναι, πάσχειν.* (3)

(*b*) Give the dative plural of :—*ὄρνις, υἱός, νεώς, χείρ.* (2)

(*c*) Give the Greek for :—at the beginning of spring, to sell for four talents, up the river, from Athens. (2)

1959
SCOTTISH LEAVING CERTIFICATE EXAMINATION

HEBREW

LOWER GRADE

Monday, 16th March—9.30 A.M. to 12 NOON.

N.B.—Begin the answer (or fair copy of an answer) to each question on a fresh page.
Marks will be deducted for bad spelling and bad punctuation, and for writing that is difficult to read.
Answers in Hebrew must be written in the square character.
The value attached to each question is shown in the margin.

[TURN OVER

Marks

1. Translate into English any **TWO** of the following passages (*a*), (*b*) and (*c*).

(*a*)

וַיִּיטַב הַדָּבָר בְּעֵינֵי אֲדֹנָי כִּי שָׁאַל שְׁלֹמֹה אֶת־הַדָּבָר הַזֶּה׃ וַיֹּאמֶר אֱלֹהִים אֵלָיו יַעַן אֲשֶׁר שָׁאַלְתָּ אֶת־הַדָּבָר הַזֶּה וְלֹא־שָׁאַלְתָּ לְךָ יָמִים רַבִּים וְלֹא שָׁאַלְתָּ לְךָ עֹשֶׁר וְלֹא שָׁאַלְתָּ נֶפֶשׁ אֹיְבֶיךָ וְשָׁאַלְתָּ לְךָ הָבִין לִשְׁמֹעַ מִשְׁפָּט׃ הִנֵּה עָשִׂיתִי כִּדְבָרֶךָ הִנֵּה נָתַתִּי לְךָ לֵב חָכָם וְנָבוֹן אֲשֶׁר כָּמוֹךָ לֹא־הָיָה לְפָנֶיךָ וְאַחֲרֶיךָ לֹא־יָקוּם כָּמוֹךָ׃ וְגַם אֲשֶׁר לֹא־שָׁאַלְתָּ נָתַתִּי לְךָ גַּם־עֹשֶׁר גַּם־כָּבוֹד אֲשֶׁר לֹא־הָיָה כָמוֹךָ אִישׁ בַּמְّלָכִים כָּל־יָמֶיךָ׃ וְאִם תֵּלֵךְ בִּדְרָכַי לִשְׁמֹר חֻקַּי וּמִצְוֹתַי כַּאֲשֶׁר הָלַךְ דָּוִיד אָבִיךָ וְהַאֲרַכְתִּי אֶת־יָמֶיךָ׃ וַיִּקַץ שְׁלֹמֹה וְהִנֵּה חָלוֹם וַיָּבוֹא יְרוּשָׁלִַם וַיַּעֲמֹד לִפְנֵי אֲרוֹן בְּרִית־אֲדֹנָי וַיַּעַל עֹלוֹת וַיַּעַשׂ שְׁלָמִים וַיַּעַשׂ מִשְׁתֶּה לְכָל־עֲבָדָיו׃

20

(I Kings iii, 10–15)

(*b*)

יהוה מָה־רַבּוּ צָרָי רַבִּים קָמִים עָלָי׃
רַבִּים אֹמְרִים לְנַפְשִׁי אֵין יְשׁוּעָתָה לוֹ בֵאלֹהִים׃
וְאַתָּה יהוה מָגֵן בַּעֲדִי כְּבוֹדִי וּמֵרִים רֹאשִׁי׃
קוֹלִי אֶל־יהוה אֶקְרָא וַיַּעֲנֵנִי מֵהַר קָדְשׁוֹ׃
אֲנִי שָׁכַבְתִּי וָאִישָׁנָה הֱקִיצוֹתִי כִּי יהוה יִסְמְכֵנִי׃
לֹא אִירָא מֵרִבְבוֹת עָם אֲשֶׁר סָבִיב שָׁתוּ עָלָי׃
קוּמָה יהוה הוֹשִׁיעֵנִי אֱלֹהַי כִּי־הִכִּיתָ אֶת־כָּל־אֹיְבַי לֶחִי שִׁנֵּי רְשָׁעִים שִׁבַּרְתָּ׃
לַיהוה הַיְשׁוּעָה עַל־עַמְּךָ בִרְכָתֶךָ׃

20

(Psalm iii, 2–9)

Marks

(c)

וְהֵקִימוּ אֶבֶן, וּמָצְאוּ שָׁם פִּי מְעָרָה· אָמַר אֶחָד לַחֲבֵרוֹ: נִכָּנֵס, וְנִרְאֶה אִם יֵשׁ שָׁם מָמוֹן״· וְהָלְכוּ בְּמְבוֹא הַמְּעָרָה עַד שֶׁהִגִּיעוּ אֵצֶל [1] אַרְמוֹן אֶחָד גָּדוֹל, בָּנוּי עַל עַמּוּדֵי [2] שַׁיִשׁ, מְצֻפֶּה בְּכֶסֶף וּבְזָהָב· וּלְפָנָיו שֻׁלְחַן זָהָב [3] וְשַׁרְבִיט וַעֲטֶרֶת· וְהוּא קֶבֶר דָּוִיד הַמֶּלֶךְ, וְלִשְׁמֹאלוֹ קֶבֶר שְׁלֹמֹה הַמֶּלֶךְ כְּמוֹ כֵן, וְכֵן קִבְרֵי כָּל הַמְּלָכִים הַקְּבוּרִים שָׁם מִמַּלְכֵי יְהוּדָה· וְשָׁם אַרְנָזוֹת סְגוּרוֹת, שֶׁאֵין אָדָם יוֹדֵעַ מַה שֶּׁבָּהֶם· וְרָצוּ אֵלּוּ שְׁנֵי הָאֲנָשִׁים לִכָּנֵס בָּאַרְמוֹן, וְהִנֵּה רוּחַ סְעָרָה יוֹצֵא מִפִּי הַמְּעָרָה, וְהִכָּה אוֹתָם, וְנָפְלוּ לָאָרֶץ כְּמֵתִים וְשָׁכְבוּ עַד הָעֶרֶב: וְהִנֵּה רוּחַ אֶחָד בָּא, צוֹעֵק בְּקוֹל אָדָם: קוּמוּ, צְאוּ מִן הַמָּקוֹם הַזֶּה:״

20

(Benjamin of Tudela)

(1) Hall.
(2) Marble.
(3) Sceptre.

Marks

2. Parse the words underlined in the two passages which you have translated. **18**

3. Render into pointed Biblical Hebrew :—
   (*a*) The enemies of the men of Israel came up against them and they fought all the day.
   (*b*) Our mighty men are fallen. Tell it not in the cities of Moab.
   (*c*) My son, keep thy father's commandments and walk in all his ways.
   (*d*) The God of our fathers brought them out of the land of Egypt, and caused them to hear his law. **22**

4. Point and translate into English :—

(*a*) לא יכרת עוד עמי ישראל מפני איביהם:

(*b*) וישמעו האדם ואשתו את קול יהוה מתהלך בגן:

(*c*) בקשו עבדי המלך מים ולא מצאו:

(*d*) אמר האדם האשה אשר נתת לי לאשה היא נתנה לי מן העץ:

20

1959
SCOTTISH LEAVING CERTIFICATE EXAMINATION

HEBREW

HIGHER GRADE—(FIRST PAPER)

Monday, 16th March—9.30 A.M. to 12 NOON.

N.B.—Begin the answer (or fair copy of an answer) to each question on a fresh page.

Marks will be deducted for bad spelling and bad punctuation, and for writing that is difficult to read.

Answers in Hebrew must be written in the square character.

The value attached to each question, or to each part of a question, is shown in the margin.

[TURN OVER

Marks

1. Translate into English any **TWO** of the following passages (*a*), (*b*) and (*c*).

(*a*)

וַיֵּדוּ לְיוֹתָם וַיֵּלֶךְ וַיַּעֲמֹד בְּרֹאשׁ הַר־גְּרִזִים וַיִּשָּׂא קוֹלוֹ וַיִּקְרָא וַיֹּאמֶר
לָהֶם שִׁמְעוּ אֵלַי בַּעֲלֵי שְׁכֶם וְיִשְׁמַע אֲלֵיכֶם אֱלֹהִים: הָלוֹךְ הָלְכוּ
הָעֵצִים לִמְשֹׁחַ עֲלֵיהֶם מֶלֶךְ וַיֹּאמְרוּ לַזַּיִת מָלְכָה עָלֵינוּ: וַיֹּאמֶר לָהֶם
הַזַּיִת הֶחָדַלְתִּי אֶת־דִּשְׁנִי אֲשֶׁר־בִּי יְכַבְּדוּ אֱלֹהִים וַאֲנָשִׁים וְהָלַכְתִּי
לָנוּעַ עַל־הָעֵצִים: וַיֹּאמְרוּ הָעֵצִים לַתְּאֵנָה לְכִי־אַתְּ מָלְכִי עָלֵינוּ:
וַתֹּאמֶר לָהֶם הַתְּאֵנָה הֶחָדַלְתִּי אֶת־מָתְקִי וְאֶת־תְּנוּבָתִי הַטּוֹבָה וְהָלַכְתִּי
לָנוּעַ עַל־הָעֵצִים: וַיֹּאמְרוּ הָעֵצִים לַגֶּפֶן לְכִי־אַתְּ מָלְכִי עָלֵינוּ וַתֹּאמֶר
לָהֶם הַגֶּפֶן הֶחָדַלְתִּי אֶת־תִּירוֹשִׁי הַמְשַׂמֵּחַ אֱלֹהִים וַאֲנָשִׁים וְהָלַכְתִּי לָנוּעַ
עַל־הָעֵצִים: וַיֹּאמְרוּ כָל־הָעֵצִים אֶל־הָאָטָד לֵךְ־אַתָּה מְלָךְ־עָלֵינוּ
וַיֹּאמֶר הָאָטָד אֶל־הָעֵצִים אִם בֶּאֱמֶת אַתֶּם מֹשְׁחִים אֹתִי לְמֶלֶךְ עֲלֵיכֶם
בֹּאוּ חֲסוּ בְּצִלִּי וְאִם־אַיִן תֵּצֵא אֵשׁ מִן־הָאָטָד וְתֹאכַל אֶת־אַרְזֵי הַלְּבָנוֹן:

29

(Judges ix, 7–15)

(*b*)

עוּרִי עוּרִי לִבְשִׁי עֻזֵּךְ צִיּוֹן לִבְשִׁי בִּגְדֵי תִפְאַרְתֵּךְ יְרוּשָׁלַם עִיר הַקֹּדֶשׁ
כִּי לֹא יוֹסִיף יָבוֹא־בָךְ עוֹד עָרֵל וְטָמֵא: הִתְנַעֲרִי מֵעָפָר קוּמִי שְׁבִי
יְרוּשָׁלִָם הִתְפַּתְּחִי מוֹסְרֵי צַוָּארֵךְ שְׁבִיָּה בַת־צִיּוֹן: כִּי־כֹה אָמַר יהוה
חִנָּם נִמְכַּרְתֶּם וְלֹא בְכֶסֶף תִּגָּאֲלוּ: כִּי כֹה אָמַר אֲדֹנָי יהוה מִצְרַיִם (*a*)
יָרַד עַמִּי בָרִאשֹׁנָה לָגוּר שָׁם וְאַשּׁוּר בְּאֶפֶס עֲשָׁקוֹ: וְעַתָּה מַה־לִּי־פֹה (*b*)
נְאֻם־יהוה כִּי־לֻקַּח עַמִּי חִנָּם מֹשְׁלָיו יְהֵילִילוּ נְאֻם־יהוה וְתָמִיד (*c*)
כָּל־הַיּוֹם שְׁמִי מְנֹאָץ: לָכֵן יֵדַע עַמִּי שְׁמִי לָכֵן בַּיּוֹם הַהוּא כִּי־אֲנִי־הוּא (*d*)
הַמְדַבֵּר הִנֵּנִי: מַה־נָּאוּו עַל־הֶהָרִים רַגְלֵי מְבַשֵּׂר מַשְׁמִיעַ שָׁלוֹם מְבַשֵּׂר
טוֹב מַשְׁמִיעַ יְשׁוּעָה אֹמֵר לְצִיּוֹן מָלַךְ אֱלֹהָיִךְ:

29

(Isaiah lii, 1–7)

Marks

(c)

בְּשָׁעָה שֶׁהוֹצִיאוּ אֶת־רַבִּי עֲקִיבָא לַהֲרִיגָה זְמַן קְרִיאַת שְׁמַע הָיָה; וְהָיוּ סוֹרְקִין אֶת־בְּשָׂרוֹ [1] בְּמַסְרְקוֹת שֶׁל בַּרְזֶל וְהָיָה מְקַבֵּל עָלָיו עֹל מַלְכוּת שָׁמַיִם. אָמְרוּ לוֹ תַּלְמִידָיו „רַבֵּנוּ עַד כָּן?" אָמַר לָהֶם: „כָּל יָמַי הָיִיתִי מִצְטָעֵר עַל פָּסוּק זֶה: בְּכָל־נַפְשְׁךָ, אֲפִלּוּ נוֹטֵל אֶת־נַפְשֶׁךָ; אָמַרְתִּי: מָתַי יָבוֹא לִידִי וַאֲקַיְּמֶנּוּ? וְעַכְשָׁו שֶׁבָּא לִידִי לֹא אֲקַיְּמֶנּוּ?" הָיָה מַאֲרִיךְ בְּאֶחָד עַד שֶׁיָּצְאָה נִשְׁמָתוֹ בְּאֶחָד. יָצְתָה בַּת קוֹל וְאָמְרָה: „אַשְׁרֶיךָ, ר' עֲקִיבָא, שֶׁיָּצְאָה נִשְׁמָתְךָ בְּאֶחָד".

[1] Combs.

(Talmud Bab., Berachoth 61b)

29

2. Point and translate :—

(a) אברך את־מברכיך ונברכו בך כל משפחת האדמה:

(b) הנה אנכי שלח מלאך לפניך לשמרך בדרכך השמר לך מפניו ושמע בקולו:

(c) וזכרת את כל הדרך אשר הוליכך אלהיך במדבר להביאך אל ארצך:

(d) הנה אנכי מת ואתם שובו אל ארץ אבותינו לשבת שם:

28

Marks

3. Write :—

(*a*) the 3rd plural masculine imperfect Qal of

יצא, מצא, שוּב, אבד, ענה

5

(*b*) the 3rd singular masculine perfect, 3rd singular masculine imperfect, singular masculine imperative, infinitive construct, and singular masculine participle fo

the Qal of לקח

the Hiphil of ידע

the Niphal of עשׂה

the Piel of ברך

20

(*c*) the construct plural of

בַּיִת, יַם, יוֹם, אָב, בֵּן

5

(*d*) Translate into pointed Hebrew

(i) He did not give.

(ii) Do not give.

(iii) He is not taking.

(iv) I forbade him to take. 4

1959
SCOTTISH LEAVING CERTIFICATE EXAMINATION

HEBREW

HIGHER GRADE—(SECOND PAPER)

Monday, 16th March—1.30 P.M. to 3.30 P.M.

N.B.—Begin the answer (or fair copy of an answer) to each question on a fresh page.
Marks will be deducted for writing that is difficult to read.
Answers must be written in the square character.
The value attached to each question is shown in the margin.

Marks

1. Render into pointed Biblical Hebrew :—

A certain man, going down to Jericho, fell into the hands of men of blood, who stripped him and beat him, and went off, leaving him half-dead. And it happened that a priest was going down that way, and when he saw him he passed by on the other side. So too a Levite, when he came to the place, saw him, but passed by on the other side. Then a peasant came along with his ass, and, seeing him, took pity on him, and came to him, and washed his wounds, and poured oil on them, and bound them up. Then he set him on his ass and brought him to an inn and laid him on a bed. On the next day he had to go on his way, but he strictly charged the innkeeper to look after him, giving him money and promising to give whatever more might be necessary, when he returned from Jericho. The peasant was the real friend, and we all must do likewise. **60**

2. Render into pointed Biblical Hebrew :—

(*a*) The man arose and took his wife and daughter, and went over to the land of Moab and dwelt there.

(*b*) The sons of the men of Israel saw the daughters of the land and took them to themselves as wives.

(*c*) In the days when Solomon ruled over the land he dwelt in the city of his father and built a temple to his God.

(*d*) Say not again, O men of Israel, ' My way is hidden from my God '. **20**

(C64818)

1959

SCOTTISH LEAVING CERTIFICATE EXAMINATION

FRENCH

LOWER GRADE—(PAPER (a))

AURAL COMPREHENSION TEST

Friday, 6th March—9.15 A.M. to 9.45 A.M.

This paper must not be seen by any candidate.

INSTRUCTIONS TO THE TEACHER

1. Use the ten minutes preceding the beginning of the test to make yourself thoroughly familiar with the passage to be read.

2. When so instructed by the supervising officer, read to the candidates the "Instructions to Candidates" given below.

3. Then read the passage aloud to the candidates, speaking clearly and naturally, and taking not more than **four minutes** to the reading.

4. After this reading inform the candidates that they may now turn over the printed question papers, and that they will have three minutes in which to study the questions. Remind the candidates that they may make notes during this interval of three minutes, but only on the sheets provided for the answers. You yourself will not be allowed to see the questions which are to be answered by the candidates.

5. When so instructed by the supervising officer, read the passage a second time, in exactly the same manner as on the first occasion and taking the same amount of time.

6. Remind the candidates that the questions are to be answered in English.

INSTRUCTIONS TO CANDIDATES

1. Listen carefully to the following passage with a view to answering questions on its content.

2. The questions are to be answered in English.

3. You are on no account to touch the printed question paper or to do any writing until you are told to do so.

4. The procedure will be as follows :—
   (i) The passage will be read **twice,** with an interval of three minutes between the readings.
   (ii) After the first reading you will be allowed to turn over the printed question paper and you will have three minutes in which to study the questions.
   (iii) After the second reading you will write your answers on the sheet provided for this purpose.

5. All writing during the first and second readings is **strictly forbidden.** Notes may be made during the interval between the readings, but only on the sheet provided for the answers.

6. You may not ask for the repetition of any word or phrase.

Passage to be read to the candidates :—(Maximum time of reading—four minutes).

Un matin on entendit des cris, des appels, des aboiements qui venaient de la ferme de Monsieur Bertrand. Son taureau s'était échappé du pré et était entré dans le verger. Le fermier et ses fils l'avaient entouré, mais le taureau avait attaqué le plus jeune des fils, qui avait été obligé de grimper dans un pommier. Voyant que sa victime lui avait échappé, le taureau enragé sortit sur la grand'route et se précipita vers la ferme voisine, celle de Monsieur Dominique.

Quand Monsieur Dominique vit le taureau s'approcher, il chercha vite un bâton pour maîtriser la bête ; mais il ne trouva rien. Le taureau s'arrêta au milieu de la route, baissa la tête, et se prépara à se jeter sur cet homme qui lui barrait le chemin.

— Au secours, s'écria la fermière, qui était venue sur la grand'route ; au secours, le taureau va tuer mon mari.

Au cri de la fermière, Robert, le domestique, accourut. C'est alors qu'on vit une chose incroyable qui frappa de stupeur tous les assistants. Robert alla droit au taureau et, arrivé à un mètre de l'animal, s'arrêta. Puis il se pencha un peu, et le regarda fixement dans les yeux. Tous cessèrent de respirer : la bête allait bondir.

Mais ce fut l'homme qui fit le premier mouvement. Il saisit de ses mains énormes les cornes de la bête. Le taureau, surpris, essaya de se libérer et en même temps souleva son adversaire dans l'air ; mais Robert, exerçant toutes ses forces, réussit à remettre ses deux pieds sur terre, sans lâcher les cornes du taureau. Pendant deux longues minutes l'homme et l'animal restèrent immobiles. Alors les spectateurs stupéfaits virent le cou du taureau se tordre peu à peu sous la lente et terrible pression des mains de Robert. Enfin le taureau tomba sur ses genoux. Robert fit signe à son maître de s'approcher. Monsieur Dominique vint passer une corde dans l'anneau du taureau, qui maintenant se laissa reconduire doucement chez lui. Robert s'essuya le front et s'en alla, sans dire un mot.

1959
SCOTTISH LEAVING CERTIFICATE EXAMINATION

FRENCH

LOWER GRADE—(PAPER (a))

AURAL COMPREHENSION TEST

Friday, 6th March—9.15 A.M. to 9.45 A.M.

Answers are to be written on the sheet provided for the purpose, on which are also to be written any notes made between the readings.

QUESTIONS

	Marks
1. Where did the bull escape from and where did it go first ?	1
2. What attempt was made to capture it ? How did the bull counter this attempt, and with what results ?	$2\frac{1}{2}$
3. What did Monsieur Dominique, the second farmer, try to do, and why did he fail ? In what way did he give proof of courage ?	$1\frac{1}{2}$
4. What brought Robert on the scene ?	$\frac{1}{2}$
5. Describe in detail : (*a*) Robert's approach to the bull, (*b*) the struggle which took place between Robert and the bull.	6
6. What were the main feelings of the spectators, and what gave rise to them ?	$1\frac{1}{2}$
7. What is the final picture given of (*a*) the bull, (*b*) Robert ?	2
	15

(C64620)

1959
SCOTTISH LEAVING CERTIFICATE EXAMINATION

FRENCH

LOWER GRADE—(PAPER (b))

Friday, 6th March—10.0 A.M. to 12.15 P.M.

N.B.—Begin the answer (or fair copy of an answer) to each question on a fresh page.

Marks will be deducted for bad spelling and bad punctuation, and for writing that is difficult to read.

The value attached to each question is shown in brackets after the question.

1. Translate carefully, with due attention to English form and expression :—

Discovery of a Young Genius

Alice était en train de faire le ménage lorsque son regard tomba sur le groupe formé par sa petite sœur et le chien, jouant ensemble dans leur coin habituel.

L'enfant, assise par terre, tenait le chien par une oreille, et sa main devait pincer trop fort, car le chien poussait des cris plaintifs. Cependant, il n'osait pas se libérer, de peur de faire mal à l'enfant. Son attitude et celle de la petite étaient si expressives qu'Alice s'arrêta pour les observer. Quel dommage, pensait-elle, que je n'aie pas un appareil photographique !

Soudain une idée lui vint : Si je les dessinais ! Jamais elle n'avait rien tenté de la sorte, mais l'envie qu'elle avait de conserver la petite scène lui donna une inspiration inattendue et au bout de quelques minutes l'esquisse était finie.

Puis un nouveau projet la fit sourire. Je vais chercher de la plastiline* dans l'atelier de mon père, se dit-elle, et alors je pourrai essayer de modeler quelque chose d'après mon dessin.

Ainsi fit-elle. Depuis son enfance elle avait vu sculpter son père ; maintenant elle prit tranquillement la plastiline dans ses mains et, sans la moindre hésitation, se mit à modeler. Une heure passa. Alors la porte s'ouvrit et son père entra.

— Qu'est-ce que c'est que ça ? dit-il.

Alice se retourna pour le regarder, se demandant si elle avait peut-être mal fait de prendre la plastiline sans demander la permission. Mais déjà son père venait vers elle, les bras ouverts, et ses yeux riaient.

— Ma chérie, dit-il, ma chère enfant ! **(30)**

* la plastiline = clay (for modelling).

[TURN OVER

2. Read the passage below, then answer the questions which follow it.

N.B.—The passage is NOT to be translated.

Three Companions

Jean Kernevel était un homme de cinquante ans, grand, bien bâti, mais malade du cœur. Depuis longtemps ses camarades observaient avec inquiétude son teint pâle, ses lèvres bleues comme de l'encre, ses yeux sans animation, et dans son regard on lisait clairement qu'il pensait : "Il ne me reste plus long-
5 temps à vivre."

Auprès de lui son vieux camarade Fortuné paraissait petit, car Kernevel le dépassait de la tête, ce qui n'empêchait pas Fortuné d'être un homme vigoureux et qui n'avait jamais connu la maladie. Il avait les yeux clairs, le teint frais, et sa bouche était rose comme celle d'une jeune fille.

10 Ils étaient tous deux du même âge, et depuis leur plus jeune enfance ils ne s'étaient guère quittés. Elèves dans la même école, ils avaient fait plus tard leur apprentissage ensemble, et ils avaient travaillé avant la guerre chez les mêmes patrons. Même la guerre ne les avait séparés que pendant quelques semaines après la blessure de Fortuné, et ils s'étaient bientôt retrouvés côte à
15 côte dans les tranchées.

Rentrés chez eux après la guerre, ils avaient fait la connaissance d'un jeune homme nommé Dagorme, et ils s'étaient mis d'accord avec lui pour fonder une petite entreprise de construction de bâtiments. Bons ouvriers tous les trois, ils s'étaient vite fait une réputation, et ils gagnaient largement
20 leur vie.

C'était Kernevel qui menait l'affaire, tandis que ses camarades se contentaient d'obéir. Il avait de l'intelligence, du jugement ; il savait tourner une lettre, tenir les comptes ; il ne buvait pas, ne se mettait jamais en colère. Dagorme était fort et habile et il ne manquait pas d'intelligence, mais
25 il était trop jeune pour avoir de l'autorité. Quant à Fortuné, il travaillait dur pendant la semaine, mais il n'avait pas d'ambition et tout le temps il songeait au samedi après-midi, quand il avait l'habitude d'aller aux courses de bicyclettes.

Malgré sa maladie, Jean Kernevel n'avait jamais ménagé ses forces;
30 quand il n'avait pas de rendez-vous avec des clients ou des fournisseurs de matériaux, il arrivait au travail en même temps que les autres, et il en repartait à la même heure. Cependant il lui fallait de plus en plus souvent prendre un peu de repos pendant la journée.

Chaque fois que les deux autres le voyaient quitter son travail pour aller
35 s'étendre dans un coin sur des sacs, ils se disaient : " Le bonhomme Kernevel faiblit. Quand nous le perdrons, nous perdrons tout : l'entreprise sera finie." Mais les deux travaillaient davantage pour rattraper le temps perdu, et l'entreprise prospérait.

QUESTIONS

Marks

A. Answer in English :—

(1) In what ways did Kernevel and Fortuné differ physically ? **6½**

(2) During what periods of their life had they been together ? Why had they been temporarily separated ? **4**

(3) (*a*) When and for what purpose had Kernevel and Fortuné joined forces with a third man ?

(*b*) To what extent had the three men succeeded in their purpose ?

(*c*) To what quality common to all can this be attributed ? **4**

(4) Which of the three men played the leading rôle in their joint project ? Show, by describing the diversity of character, ability, and habits of the three men, that this was inevitable. **7**

(5) In what way did one of the men show great moral courage ?

What was he nevertheless forced to do and why did this alarm his companions ?

What was the ultimate effect on their project ? **5½**

B. Answer in French :—

(6) Pourquoi Kernevel aurait-il rendez-vous avec (*a*) un client, (*b*) un fournisseur ? (line 30) **3**

30

3. Write, in French, a continuous story based on the following summary.

N.B.—Your story should be about 200 words in length (i.e. about four-fifths the length of the translation of Question 1). Use appropriate PAST tenses.

Vous invitez des amis pour célébrer votre anniversaire (birthday)—les invités arrivent—vous vous mettez à table—vous vous amusez après—ils s'en vont. **(25)**

1959

SCOTTISH LEAVING CERTIFICATE EXAMINATION

FRENCH

HIGHER GRADE—(FIRST PAPER)

Friday, 6th March—10.0 A.M. to 12.15 P.M.

N.B.—Begin the answer (or fair copy of an answer) to each question on a fresh page.

Marks will be deducted for bad spelling and bad punctuation, and for writing that is difficult to read.

The value attached to each question is shown in brackets after the question.

1. Translate carefully, with due attention to English form and expression :—

Tante Clarisse

Mes parents durent s'absenter encore une fois pendant quelques jours. On me laissa à la maison. Mais on y fit venir Tante Clarisse. Par la suite elle demeura avec nous. Ainsi, grâce à elle, je ne fus plus remis à des personnes étrangères et les absences de mes parents furent moins douloureuses. Car Tante Clarisse m'aimait, et moi j'aimais beaucoup Tante Clarisse. Nous étions faits à merveille pour nous entendre.

Tante Clarisse alors avait passé de peu la soixantaine. Elle était petite et alerte. Ce qui frappait en elle, c'était sa taille et sa vivacité. Elle ne pouvait pas tenir en place. A peine assise, elle frémissait d'impatience et d'un bond se levait. Jamais elle ne restait inactive. Elle s'inventait mille petits travaux. " Je suis accablée," disait-elle avec un soupir ; " on n'en finit plus." Et la voilà qui lavait, qui balayait, qui frottait, qui polissait, qui cousait. Tout cela dans la fièvre. Elle avait cette hâte, un peu dramatique, des gens pour qui le temps est toujours en avance sur l'ouvrage.

Et elle était despotique. Non seulement canards, dindons, poules lui obéissaient mais les objets eux-mêmes. Moi, la douceur même, je devais obéir comme eux. Mais ce n'était qu'un jeu, car j'avais l'amour de Tante Clarisse et, qui mieux est, sa confiance. Elle me donnait, le matin, le programme de ma journée : " Tu iras couper deux laitues, ramasser un panier de trèfle pour les lapins." Petites tâches dont je m'acquittais facilement et avec plaisir. Pour le reste du jour j'étais libre de vivre à ma guise. **(30)**

[TURN OVER

2. Carefully read the poem given below, then answer the questions which follow it.

N.B.—The poem is NOT to be translated.

La Porte de la Maison de ferme.

Confiante au pays des ancêtres, sachant
Qu'il n'arrivera rien de funeste des champs
Aimés d'elle depuis sa première jeunesse,
La porte tout le jour demeure ouverte, et laisse
Entrer paisiblement au cœur de la maison
La lumière du ciel et l'odeur des saisons.

Elle rit au lever du soleil qui dore,
Et bâille pour humer[1] la fraîcheur de l'aurore ;
Elle a pour visiteurs les souffles du printemps
Et la rumeur des blés dans les mois éclatants.

Elle n'est point sévère aux mendiants qui passent
Et, comme aux temps anciens, chargés d'une besace,[2]
Vont demandant leur pain, pour l'amour du bon Dieu :
Elle sait que ceux-là n'ont pas de mauvais yeux.[3]

Souvent même elle fait un accueil indulgent
Aux bêtes qui chez nous vivent avec les gens :
Les poules, sur le seuil, gloussent, grattent, picorent,
Cependant que le coq, impudent et sonore,
Brave le chien maussade et cherche son butin
Jusqu'aux pieds de la huche où l'on garde le pain.

Ou, lorsque le pâtre rentre des prés le soir,
Une vache, soudain, curieuse de voir
Comment chez les humains une maison est faite,
Par la porte béante aventure sa tête.

* * *

Quand, le soleil couché, les choses que l'on voit
Prennent soudainement une forme qui change
Leur visage amical en des faces d'effroi,
Et que nos propres pas nous paraissent étranges ;

Quand ceux qui travaillaient au loin sont revenus,
Laissant les champs déserts et les ténèbres seules,
Et quand les chemins sont [4] aux passants inconnus
Qu'on n'aime pas trouver rôdant autour des meules ;

Sachant qu'il n'est pas bon que les siens aient sur eux
La menace et la peur des ombres ennemies,
La porte, close à l'heure où l'on éteint les feux,
Veille pieusement sur leur âme endormie.

[1] humer = respirer.
[2] une besace = sac que portaient les mendiants.
[3] avoir le mauvais œil = porter malheur.
[4] sont aux = appartiennent aux.

QUESTIONS

Marks

A. Answer in English :—

1. (*a*) The use of the word " confiante " suggests that the door is being personified in this poem. What other evidence for this is there in the first verse ?

(*b*) In this verse how does the door show its confidence ? What reasons has it for being confident ? **4½**

2. In lines 7 and 8 what is the door described as doing ? What actual picture are these lines intended to convey ? **3½**

3. The door has various callers. Who are they ? What are we told about the ways in which it receives some of them ?

What description does the poet give of the behaviour of some of these callers ? **10½**

4. (*a*) What changes take place in the countryside at nightfall ?

(*b*) Describe how these changes affect the whole attitude and behaviour of the door. **8½**

B. Answer in French :—

5. Expliquez ce que signifie l'expression : " le soleil qui dore ". (line 7) **1½**

6. Pourquoi un mendiant portait-il une besace ? (line 12) **1½**

30

3. Translate carefully, with due attention to English form and expression :—

Chaque matin, pendant toute ma jeunesse, j'allais à pied jusqu'au village prendre le même train qui me ramènerait après les classes. Je partais au lever du jour, et revenais à la tombée de la nuit. Dans le petit matin gris, ou le soir dans le brouillard sombre de l'hiver, le train faisait de longues haltes aux trois villages qui séparent mon village de la ville. Chacune de ces gares paraissait une maison de paysan parmi toutes les autres : on n'y voyait guère qu'une ou deux fenêtres allumées, une ombre derrière les vitres, un chien sur le seuil, et on imaginait là une vie paisible et familiale, n'ayant aucun rapport avec le train, les voyages, ou la ville toute proche.

Dans les compartiments, il n'y avait pas d'autre lumière qu'une lampe bleuâtre, si faible que j'avais renoncé pendant les mois d'hiver à repasser mes leçons. On devinait seulement la forme des visages, et la masse sombre des corps qui suivaient en oscillant le mouvement du train. Parmi les voyageurs il y avait peu d'inconnus pour moi. J'évitais les bavards, et préférais écouter le bruit monotone et lourd des roues, si favorable à la rêverie. Par la fenêtre je regardais les lumières de la ville, rares et pâles le matin, innombrables et scintillantes le soir, l'eau immobile du canal qu'on franchissait avec un grand bruit de ferraille, les silhouettes noires des arbres.

(25)

SC

1
tho
2
the
3
nat
4
the
stu
this
You
by
5
tim
amo
6

1
on i
2.
3.
writ
4.

5.
may
prov
6.

1959

SCOTTISH LEAVING CERTIFICATE EXAMINATION

FRENCH

HIGHER GRADE—(SECOND PAPER (a))

AURAL COMPREHENSION TEST

Friday, 6th March—1.30 P.M. to 2.0 P.M.

This paper must not be seen by any candidate.

INSTRUCTIONS TO THE TEACHER

1. Use the ten minutes preceding the beginning of the test to make yourself thoroughly familiar with the passage to be read.

2. When so instructed by the supervising officer, read to the candidates the "Instructions to Candidates" given below.

3. Then read the passage aloud to the candidates, speaking clearly and naturally, and taking not more than **four minutes** to the reading.

4. After this reading inform the candidates that they may now turn over the printed question papers, and that they will have three minutes in which to study the questions. Remind the candidates that they may make notes during this interval of three minutes, but only on the sheets provided for the answers. You yourself will not be allowed to see the questions which are to be answered by the candidates.

5. When so instructed by the supervising officer, read the passage a second time, in exactly the same manner as on the first occasion and taking the same amount of time.

6. Remind the candidates that the questions are to be answered in English.

INSTRUCTIONS TO CANDIDATES

1. Listen carefully to the following passage with a view to answering questions on its content.

2. The questions are to be answered in English.

3. You are on no account to touch the printed question paper or to do any writing until you are told to do so.

4. The procedure will be as follows :—
   (i) The passage will be read **twice,** with an interval of three minutes between the readings.
   (ii) After the first reading you will be allowed to turn over the printed question paper and you will have three minutes in which to study the questions.
   (iii) After the second reading you will write your answers on the sheet provided for this purpose.

5. All writing during the first and second readings is **strictly forbidden.** Notes may be made during the interval between the readings, but only on the sheet provided for the answers.

6. You may not ask for the repetition of any word or phrase.

Passage to be read to the candidates :—(Maximum time of reading—four minutes).

Arrivé à un endroit dans la montagne où une masse de rochers lui bloquait le chemin, Marcel s'arrêta. Impossible d'aller plus loin. Il avait chassé toute la matinée et il était complètement épuisé. Il décida, donc, de redescendre dans la vallée. Avant de commencer sa descente il s'assit un moment, posa son fusil, et contempla le paysage magnifique qui s'étendait devant lui.

Soudain un grognement le fit sursauter. Il se tourna brusquement et le sang dans ses veines se gela. Lui barrant la route, à moins de dix pieds, se tenait le grand ours qu'il avait si souvent chassé sans succès. La bête était si proche qu'il pouvait distinguer la rougeur qui colorait ses yeux, et la marque laissée dans sa peau par la balle qu'il avait tirée la semaine dernière. Et quand l'ours se dressa de toute sa hauteur d'un mouvement lent et gracieux, Marcel reconnut que c'était un animal magnifique.

Marcel fit un mouvement pour saisir son fusil. A son horreur le fusil glissa dans le précipice. Il comprit qu'il était perdu. Il ne pouvait même pas fuir, acculé qu'il était contre un mur de roc. Quant à sauter, c'était une chute de cinq cents mètres. Malgré sa terreur Marcel ne bougea pas mais regarda l'animal droit dans les yeux. A la grande surprise de Marcel l'ours resta immobile comme déconcerté par l'inactivité de son adversaire. L'animal semblait se demander si c'était vraiment cette créature pâle et insignifiante qui lui avait donné la chasse et qui l'avait blessé. Même un chien aurait résisté plus courageusement. Il aurait montré les dents, il se serait battu. Mais cette chose qui était un homme n'offrit aucune résistance. Lentement comme avec mépris, l'ours se retourna, grogna une dernière fois, et s'en alla.

Marcel attendit encore quelques moments. Puis il s'avança jusqu'au tournant du sentier. L'ours avait complètement disparu. C'est alors seulement qu'il respira encore.

— Incroyable ! pensa-t-il. Cette brute a dans le cœur plus de générosité qu'un homme. Car moi, si je l'avais attrapé comme lui m'a attrapé tout à l'heure, je ne lui aurais pas laissé la vie.

1959
SCOTTISH LEAVING CERTIFICATE EXAMINATION

FRENCH

HIGHER GRADE—(SECOND PAPER (a))

AURAL COMPREHENSION TEST

Friday, 6th March—1.30 P.M. to 2.0 P.M.

Answers are to be written on the sheet provided for the purpose, on which are also to be written any notes made between the readings.

QUESTIONS

	Marks
1. What had Marcel been doing all morning and where ? What did he now decide to do and for what reasons ? What did he actually do ?	3
2. What description is given of the bear ? What first attracted Marcel's attention to it ? What was the immediate effect of the bear's arrival on Marcel ?	2½
3. What circumstances made Marcel's situation desperate ?	2
4. How did he react to his danger ?	1
5. In what way did the bear's behaviour surprise Marcel ? What thoughts are attributed to the bear as an explanation for its behaviour ?	4½
6. In what way did Marcel feel that the bear had given proof of its superiority to man ?	2
	15

(C64716)

S

N.

Th

1.

No
we
his
ha
ba
tov
a

an
an
hir
at
the
hir

nea

his

2.

tra

(Co

1959
SCOTTISH LEAVING CERTIFICATE EXAMINATION

FRENCH

HIGHER GRADE—(SECOND PAPER (b))

Friday, 6th March—2.15 P.M. to 4.0 P.M.

N.B.—Begin the answer (or fair copy of an answer) to each question on a fresh page.

Marks will be deducted for writing that is difficult to read.

The value attached to each question is shown in brackets after the question.

1. Translate into French :—

At last the ship entered the English Channel and one dull afternoon in November she sailed up the river to London. Early next morning Jones went ashore and with Jasper, the monkey, on his arm and some presents for his wife and children in his bag, he set out briskly for the railway station. He had not been in England for many months and his first thought was to get back home as soon as possible. But the mist which had been hanging over[1] the town had descended into the narrow streets and Jones had to grope on through a fog which grew steadily denser.

He knew at last that he had lost his way. And when presently he came to an old inn, whose windows shone dimly in the darkness, he decided to go in and ask the way to the station. However, he did not want Jasper to go with him into the inn where there would be so many people. He cast a glance at the little face beside him and saw how sad it looked. But he thought that the crowd might frighten Jasper and that the thick tobacco smoke would make him ill.

"Sit you here," he said to the little animal, as he put him down on his bag near the door, "and don't stir till I come back."

But, alas, Jones stayed too long in the inn, and when he came back, though his bag was still there where he had left it, Jasper was gone.

[1] to hang over = planer sur **(50)**

2. Write, in French, an essay on **one** of the following subjects.

Your essay should be from one to one and a half times the length of the translation of Question 1.

(*a*) Une vieille pendule parle.

(*b*) Une première visite au théâtre, au cirque, ou à la foire.

(*c*) Vous voyez passer tous les jours dans la rue trois personnes. Imaginez quelle est leur vie. **(25)**

(C64717)

S

th

"

na

th
to
du
an
an

tir
an

1959
SCOTTISH LEAVING CERTIFICATE EXAMINATION

GERMAN

LOWER GRADE—(PAPER (a))

AURAL COMPREHENSION TEST

Tuesday, 10th March—9.15 A.M. to 9.45 A.M.

This paper must not be seen by any candidate.

INSTRUCTIONS TO THE TEACHER

1. Use the ten minutes preceding the beginning of the test to make yourself thoroughly familiar with the passage to be read.

2. When so instructed by the supervising officer, read to the candidates the "Instructions to Candidates" given below.

3. Then read the passage aloud to the candidates, speaking clearly and naturally, and taking not more than **four minutes** to the reading.

4. After this reading inform the candidates that they may now turn over the printed question papers, and that they will have three minutes in which to study the questions. Remind the candidates that they may make notes during this interval of three minutes, but only on the sheets provided for the answers. You yourself will not be allowed to see the questions which are to be answered by the candidates.

5. When so instructed by the supervising officer, read the passage a second time, in exactly the same manner as on the first occasion and taking the same amount of time.

6. Remind the candidates that the questions are to be answered in English.

[TURN OVER

INSTRUCTIONS TO CANDIDATES

1. Listen carefully to the following passage with a view to answering questions on its content.

2. The questions are to be answered in English.

3. You are on no account to touch the printed question paper or to do any writing until you are told to do so.

4. The procedure will be as follows :—

(i) The passage will be read **twice,** with an interval of three minutes between the readings.

(ii) After the first reading you will be allowed to turn over the printed question paper and you will have three minutes in which to study the questions.

(iii) After the second reading you will write your answers on the sheet provided for this purpose.

5. All writing during the first and second readings is **strictly forbidden.** Notes may be made during the interval between the readings, but only on the sheet provided for the answers.

6. You may not ask for the repetition of any word or phrase.

Passage to be read to the candidates :—(Maximum time of reading—four minutes).

Am liebsten spielten wir Jungen am Hafen, wo im Winter die festgelegten Schiffe lagen, oft zwei oder drei hintereinander. Es war uns erlaubt, hier herumzutummeln und nur *eins* war uns verboten : wir durften nicht auf die Schiffe gehen. Dieses Verbot war allerdings sehr vernünftig, aber wir vergaßen es oft bei unserem Lieblingsspiel „ Räuber und Polizisten ".

Eines Wintersonntags begann die Jagd wie gewöhnlich auf dem Kirchplatz. Ich, als der älteste und stärkste, war natürlich der Räuber. Mit den anderen Jungen dicht hinter mir kam ich am Hafen an. Weil ich mich auf keine andere Weise retten konnte und weil auf den Schiffen keine Spur von Leben zu sehen war, lief ich gleich auf das zunächstliegende Schiff. Meine Verfolger hatten mich aber beinahe erreicht, so lief ich über eine Planke von dem ersten Schiff auf ein zweites hinüber. Unglücklicherweise ging es nun nicht weiter und ich war verloren, wenn ich nicht jetzt noch einen Ausweg fand, denn schon stand mein Freund Fritz auf der Planke zwischen den beiden Schiffen. Mit aller Kraft sprang ich von dem Deck über das zwischenliegende Wasser auf das erste Schiff zurück und jagte wieder aufs Ufer zu.

Aber in demselben Augenblick, wo ich wieder festen Boden unter meinen Füßen hatte, hörte ich hinter mir ein jämmerliches Schreien und dazwischen meinen Namen. So schnell wie ich ans Ufer gekommen war, ebenso schnell sprang ich auf das erste Schiff zurück. Es war höchste Zeit. Fritz hatte mir den Sprung vom zweiten zum ersten Schiff nachmachen wollen und war dabei, weil er zu kurz sprang, in die enge Wasserspalte zwischen den beiden Schiffen gefallen. An Schwimmen war nicht zu denken. Auch war das Wasser eiskalt. Ihn von oben ohne weiteres zu erreichen war unmöglich, und so griff ich nach einem etwas hinabhängenden Seile und ließ mich so weit wie möglich hinab. Jetzt konnte Fritz meinen linken Fuß gerade fassen und sich über Wasser halten, bis Leute vom Ufer kamen und ihm einen Bootshaken hinunterreichten. Gleichzeitig wurde ich von oben am Kragen gepackt und wieder auf Deck gehoben.

1959
SCOTTISH LEAVING CERTIFICATE EXAMINATION

GERMAN

LOWER GRADE—(PAPER (a))

AURAL COMPREHENSION TEST

Tuesday, 10th March—9.15 A.M. to 9.45 A.M.

Answers are to be written on the sheet provided for the purpose, on which are also to be written any notes made between the readings.

QUESTIONS

	Marks
1. Where did the boys like to play and what was their favourite game? What did they frequently forget when playing?	1½
2. What part did the author play in the game and why?	
3. Describe the course of the game on this particular day up to the point where it was interrupted.	5
4. What happened to interrupt the game and why did this happen?	
How was the author's attention attracted?	2
5. What circumstances made Fritz's predicament dangerous?	1½
6. How did the author help Fritz?	2
7. Describe the completion of the rescue.	2
	15

(C64719)

1959
SCOTTISH LEAVING CERTIFICATE EXAMINATION

GERMAN

LOWER GRADE—(PAPER (b))

Tuesday, 10th March—10.0 A.M. to 12.15 P.M.

N.B.—(1) Begin the answer (or fair copy of an answer) to each question on a fresh page.

Marks will be deducted for bad spelling and bad punctuation, and for writing that is difficult to read.

(2) The use of German script is optional.

The value attached to each question is shown in brackets after the question.

[TURN OVER

1.

2.

1. Translate carefully, with due attention to English form and expression :—

Eines Tages im Sommer, als Heinrich in der Dämmerung durch die Straßen ging, begegnete er einem alten Mann mit einem Hundekarren. Der Mann ließ seinen Wagen auf der Straße stehen und ging in die Häuser, denn er kaufte Lumpen, Knochen und alle solche Dinge, die kein Mensch mehr gebrauchen konnte. Heinrich sah ihn eben in einer Haustür verschwinden, als ein Straßenjunge ankam und den armen Hund, der sich nicht verteidigen konnte, mit einem Stocke neckte. Als der Hund knurrte und bellte und nach dem Stocke schnappte, fing er sogar an, ihn zu schlagen. Heinrich geriet in gewaltigen Zorn darüber, riß dem Jungen den Stock aus der Hand, und während er ihn herzhaft damit prügelte, sagte er: „Warte nur, du sollst auch einmal fühlen, wie das tut."

Da kam der alte Mann zurück und bat Heinrich, aufzuhören. „Lassen Sie den Jungen laufen, er wird es gewiß nicht wieder tun," sagte er. Heinrich ließ den brüllenden Jungen los und streichelte den Hund, der ihm dankbar die Hand leckte. Der Alte sah den Studenten freundlich an, drückte ihm die Hand und sagte: „Eines Tages werde ich Sie vielleicht belohnen können." Aber der Sommer verging, es wurde Herbst, bald fielen die ersten Schneeflocken, ohne daß Heinrich den alten Mann wiedergesehen hätte.

Am Heiligen Abend wanderte er traurig und allein durch die Straßen. Plötzlich hörte er sich angerufen und sah den alten Mann in der Tür eines verfallenen Hauses stehen. „Kommen Sie herein," sagte der Mann; „heute will ich Ihr Weihnachtsmann sein."

(30)

2. (*Turn over*)

2. Read the passage below, then answer the questions which follow it.

N.B.—The passage is NOT to be translated.

Im letzten Hause des Dorfes, gerade dort, wo schon der große Wald anfängt, wohnte eine arme Witwe mit ihren zwei Kindern Werner und Anna. Das wenige, das in ihrem Garten und auf dem kleinen Ackerstück wuchs, die Milch, die ihre einzige Ziege gab, und das geringe Geld, das sie durch ihre Arbeit gewann, das alles reichte gerade hin, um die kleine Familie zu ernähren, und auch die Kinder durften nicht untätig sein, sondern mußten solche Arbeit leisten, wie sie in ihren Kräften stand. Sie taten das auch willig und gern und betrachteten diese Tätigkeit als ein Vergnügen, besonders da sie dabei den herrlichen Wald durchwandern konnten. Im frühen Sommer pflückten sie die wilden Blumen zum Verkauf in der Stadt. Bald danach schimmerten die Erdbeeren rot unter dem niedrigen Kraut hervor, und während nun die Kinder der reicheren Eltern in den Wald liefen und fröhlich an der sommerlichen Fülle der Beeren schmausten oder höchstens zum Zeitvertreib einen schönen Beerenstrauß pflückten, um ihn der Mutter mitzubringen, zogen Werner und Anna herum und sammelten fleißig.

Von der alten Liese, die alle Tage mit einem Wagen voll Gemüse und dergleichen in die Stadt fuhr und für die Kinder verkaufte, was sie gesammelt hatten, lernten sie noch manches kennen, was die Stadtleute lieben und gern für ein paar Pfennige erwerben. So suchten sie zum Beispiel allerlei zierliche Moose. Solches Moos lieben die Stadtleute auf einem Teller anzuordnen, damit sich ihr Auge auf einem Stück fröhlichen Waldbodens ausruhen könne, wenn es müde ist, bloß Mauern und Dächer anzusehen.

Unter solchen fleißigen und freudigen Tätigkeiten kam dann der Herbst heran und die Zeit, wo die Stürme das trockene Holz von den Bäumen werfen und es günstig ist, die Winterfeuerung einzusammeln, die Zeit, wo sie sich schon zuweilen auf die schönen Winterabende freuten, wenn das Feuer in dem warmen Ofen aufflammt und sein Widerschein auf dem Fußboden und an den Wänden lustig tanzt, und die Mutter bei dem behaglichen Schnurren des Spinnrades ein Märchen erzählt. Unter solchen

Gedanken schleppten sie fröhlich Tag für Tag ihr Bündelchen Holz heim und türmten so allmählich neben der Hütte ein stattliches Gebirge auf.

QUESTIONS

A.—**Answer in English :—** *Marks*

1. How did the mother provide for her children and how successful was she ? **3**

2. What general effect did the family's circumstances have on the lives of Werner and Anna ?
What was their attitude to the kind of life they led and why was this so ? **4½**

3. Describe the activities in summer of (*a*) Werner and Anna, and (*b*) the other children.
Contrast the motives behind the activities of Werner and Anna with those of the other children. **5**

4. What did Liese do every day ? In what ways did she help the children ? **4½**

5. Describe in detail the work done by Werner and Anna in autumn. What thoughts helped them in their work ? **9**

B.—**Answer in German :—**

6. Warum macht das Moos den Stadtleuten Freude ? (line 24) **2½**

7. Was ist eine Witwe ? (line 2) **1½**

30

3. Write, in German, a continuous story based on the following summary :—

Your story must be written in the past tense and should be about 200 words in length (i.e., about four-fifths the length of the translation of Question 1).

Geburtstag der Mutter in einer Woche — die Kinder haben kein Geld — sie versuchen heimlich (secretly) Geld zu verdienen — glückliches Ende.

(25)

S

N.

Th

1959
SCOTTISH LEAVING CERTIFICATE EXAMINATION

GERMAN

HIGHER GRADE—(FIRST PAPER)

Tuesday, 10th March—10.0 A.M. to 12.15 P.M.

N.B.—Begin the answer (or fair copy of an answer) to each question on a fresh page.

Marks will be deducted for bad spelling and bad punctuation, and for writing that is difficult to read.

The value attached to each question is shown in brackets after the question.

[TURN OVER

1. Translate carefully with due attention to English form and expression :—

(*a*) *Our " Farmer's Boy "*

Wir hatten eine ganze Reihe Hilfsbuben gehabt, die alle nichts taugten. Endlich kam der Johann zu uns auf die Farm.

Er stammte aus einer kinderreichen Familie; sein Vater war Holzhauer und verdiente nur wenig Geld. Johann war sehr hübsch, hatte feine Manieren, fluchte, trank und rauchte nicht, lag nicht, anstatt zu arbeiten, auf unsern Sofas herum, quälte keine Tiere und aß fast alle Speisen, die man ihm vorsetzte. Er hatte zwar manche Fehler, aber im Vergleich mit seinen Vorgängern kam er uns wie ein Musterknabe vor.

Johann wollte kein Kind mehr sein. Daher trug er immer Anzüge, die in Schnitt und Farbe ebenso gut von erwachsenen Männern hätten getragen werden können. Die hellen Herrenhemden, die er sonntags trug, standen allerdings in einem gewissen Farbenkontrast zu Hals und Ohren; deshalb zwang ich ihn, wenn irgend möglich, Samstag abend zu baden. Dann ging er mürrisch und traurig umher, und als ihn mein Mann einmal nach der Ursache seines Kummers fragte, antwortete er mißmutig: „Sie will schon wieder, daß ich bade."

Er hatte außerordentlich Lust sich auszubilden und verfolgte uns den ganzen Tag mit seinen Fragen. Einmal kam er in einem wilden Schneesturm heim, warf Rucksack, Mütze und Mantel auf den Küchenboden und rief mir, die ich eben intensiv mit Kochen beschäftigt war, zu: „Wer hatte recht, Elisabeth oder Maria Stuart?" Als mein Mann eine Stunde später in der Küche erschien, waren die Ziegen nicht gemolken, die Schweine nicht gefüttert, das Essen nicht fertig, und ich stand immer noch da und versuchte Johanns geschichtliche Probleme zu lösen.

(b) *Escape*

Den ganzen Tag über hatte er die Eisenbahnlinie beobachtet und hatte festgestellt, daß zwei bis drei Güterzüge nach jeder Richtung hin verkehrten. Daher nahm er an, daß die gleiche Anzahl auch nachts vorbeifahren würde, und entschloß sich, auf einen von ihnen hinaufzuspringen. Mit wachsender Ungeduld erwartete er den Einbruch der Dunkelheit.

Endlich ging der Tag zu Ende. Im Westen leuchteten die Wolken feurig rot auf; die Schatten der Hügel streckten sich über das Tal hin; ein schwerer Bauernwagen zog gemächlich seines Weges der Stadt zu; das Tageslicht schwand dahin, und bald war es dunkel. Erst dann verließ er sein Versteck. Eilends machte er sich nach der Bahnlinie auf und schritt durch das hohe, vom Tau durchnäßte Gras, bis er die Stelle fand, wo er die Züge langsam die Steigung hatte heraufkriechen sehen. Dort setzte er sich nieder und wartete voller Hoffnung. Eine Stunde ging vorbei, eine zweite, eine dritte — und noch immer kein Zug! Der letzte war vor sechs Stunden vorübergefahren; jetzt mußte einer bald kommen. Eine weitere Stunde verging. Sein schöner Plan begann zu zerbröckeln. War es nicht möglich, daß nachts überhaupt kein Zug fuhr? So war es in der Tat, und er hätte leicht bis Tagesanbruch vergebens warten können. Aber nach Mitternacht verlor er die Geduld und machte sich zu Fuß auf den Weg, entschlossen, wenigstens fünfzehn Meilen bis zum Hellwerden zu gewinnen.

(25)

2. Carefully read the passage given below, then answer the questions which follow it.

N.B.—The passage is NOT to be translated.

Walking-tours

Eine Fußreise unterscheidet sich von einem Spaziergange hauptsächlich durch die Verschiedenheit des erwünschten Zieles und demnächst durch ihre längere Dauer, woraus die übrigen Unterschiede von selbst folgen. Der Spaziergänger versucht in bekannter, gewohnter Umgebung sich durch wenig anstrengende Bewegung von geistiger Arbeit oder von einseitiger körperlicher Tätigkeit zu erholen. Der Reisende hingegen verfolgt ein bestimmtes Ziel, welches jenseits der gewohnten Umgebung liegt und zugleich imstande ist, die größere Anstrengung zu belohnen, ohne welche es nicht erreicht werden kann. Ein Gang nach einer mehrere Stunden entfernten Höhe, wenn Hin- und Herweg einen vollen Tag in Anspruch nehmen, kann schon als eine kleine Fußreise betrachtet werden. Noch besser, wenn die Entfernung so groß ist, daß an einem oder mehreren fremden Orten übernachtet werden muß.

Welches Vergnügen gewährt schon die Vorbereitung zur Wanderfahrt! Mit welcher Spannung wird der Reiseplan entworfen! Welche Lust, am Abend vor dem Aufbruch den Rucksack mit der leichten Last zu füllen, welche Wonne, am frischen Morgen mit der munteren Schar unter heiterem Liederklang mutig und erwartungsvoll wie ein Abenteurer fortzuziehen! Da tut schon nach ein paar Stunden eine neue Welt sich auf, wo alles die Aufmerksamkeit wunderbar erweckt. Was viele Augen gesehen haben, macht jedem einzelnen doch Freude. Wie schließen sich alle Reisegenossen im Gefühle gleichen Genusses und gleicher Anstrengung bald innig und immer inniger aneinander! Wie werden in dem jugendfrischen Kreise alle Unannehmlichkeiten und Schwierigkeiten mit Mut ertragen! Wie werden andrerseits die Freuden, welche die schöne Natur oder irgend ein heiteres Erlebnis bereitet, durch die Kameradschaft erhöht! Aus Reisebrüdern werden Herzensfreunde, welche lebenslang zusammenhalten.

Freilich nicht die einförmigen Ebenen, wo keine Überraschung das Gefühl der Ermüdung zerstreut, wo man nur langsam von der Stelle zu kommen scheint, sondern nur die hohen Gebirgsgegenden können die Freude des Wanderns in ihrer ganzen Fülle verschaffen.

Die Schwierigkeiten sind zwar anfänglich für den Ungeübten nicht gering: der steinige Boden verletzt seine Füße, das Hinaufklimmen erschöpft seinen Atem, ihm schwindelt auf dem schmalen Pfade über unermeßlichen Abgründen. Allein bald folgt das Vergnügen, etwas mit eigenen Kräften errungen zu haben — ein seltsames Vergnügen für unser sitzendes und lesendes Zeitalter. Über alles geht das Gefühl der Rückkehr in die Natur. Wie die reine Bergluft stärkt und belebt! Wie die Schönheit der Berge das Fieber des Menschen stillt! So gewinnt der Fußreisende einen unschätzbaren Segen für Leib und Seele.

QUESTIONS

Marks

A.—**Answer in English :—**

1. Give in your own words the meaning of the statement with which the author begins this passage.

Show how he expands this idea in the first paragraph ; bring out clearly the contrast he is making. **8**

2. Describe the departure for the walking-tour.

What preparations had gone before and what feelings had these preparations aroused ? **5**

3. According to the author, what effects does a walking-tour have on the people who undertake it ?

Describe in detail what gives rise to these effects. **5½**

4. (*a*) What kind of country does the author prefer for his walking-tours ?

(*b*) What are the advantages of this type of country that are mentioned or implied ?

(*c*) What difficulties must be overcome before it can be fully enjoyed ? **7**

B.—**Answer in German :—**

5. Warum scheint man nur langsam von der Stelle zu kommen, wenn man über einer Ebene wandert? (Zeilen 33, 34) **2½**

6. Warum wird unser Zeitalter ein sitzendes und lesendes genannt ? (Zeile 41) **2**

30

S

th

th

"

na

th
to
du
an
be

ti
an

qu

an

1959
SCOTTISH LEAVING CERTIFICATE EXAMINATION

GERMAN

HIGHER GRADE—(SECOND PAPER (a))

AURAL COMPREHENSION TEST

Tuesday, 10th March—1.30 P.M. to 2.0 P.M.

This paper must not be seen by any candidate.

INSTRUCTIONS TO THE TEACHER

1. Use the ten minutes preceding the beginning of the test to make yourself thoroughly familiar with the passage to be read.

2. (*a*) When so instructed by the supervising officer, read to the candidates the "Instructions to Candidates" given below.

(*b*) Write on the blackboard the title of the passage to be read, which is "Das Motorrad."

3. Then read the passage aloud to the candidates, speaking clearly and naturally, and taking not more than **four minutes** to the reading.

4. After this reading inform the candidates that they may now turn over the printed question papers, and that they will have three minutes in which to study the questions. Remind the candidates that they may make notes during this interval of three minutes, but only on the sheets provided for the answers. You yourself will not be allowed to see the questions which are to be answered by the candidates.

5. When so instructed by the supervising officer, read the passage a second time, in exactly the same manner as on the first occasion and taking the same amount of time.

6. Remind the candidates that the questions are to be answered in English.

INSTRUCTIONS TO CANDIDATES

1. Listen carefully to the following passage with a view to answering questions on its content.

2. The questions are to be answered in English.

3. You are on no account to touch the printed question paper or to do any writing until you are told to do so.

[TURN OVER

4. The procedure will be as follows :—

(i) The passage will be read **twice,** with an interval of three minutes between the readings.

(ii) After the first reading you will be allowed to turn over the printed question paper and you will have three minutes in which to study the questions.

(iii) After the second reading you will write your answers on the sheet provided for this purpose.

5. All writing during the first and second readings is **strictly forbidden.** Notes may be made during the interval between the readings, but only on the sheet provided for the answers.

6. You may not ask for the repetition of any word or phrase.

7. I am going to write on the blackboard the title of the passage, which is "Das Motorrad."

Passage to be read to the candidates. (Maximum time of reading—four minutes.)

Das Motorrad

Wann das Motorrad erfunden wurde, weiß ich nicht ; ich weiß nur, daß das um die Zeit gewesen sein muß, da ich ein junger Mann war. Damals nämlich führte der Mechaniker meines Heimatdorfes ein Motorrad in unsere ländliche Stille ein. Der Wunsch, auf diesem Rad dahinzustürmen, ließ mich einfach nicht mehr los. Endlich nach langem Bitten willigte der Mechaniker ein, mich einmal auf seinem Motorrad fahren zu lassen. Ich hatte allerdings große Angst, weil zwischen mir und jeder Maschine seit meiner Kinderzeit bittere Feindschaft herrscht. Maschinen, die jedermann willig dienen, werden boshaft, wenn sie mit mir zu tun haben. Ich verstehe auch nichts von Maschinen und bin froh, wenn ich merke, was vorn und hinten ist.

Trotzdem konnte ich diesem ersten Motorrad nicht widerstehen und fuhr eines Abends los. Die wenigen Erntewagen, die noch unterwegs waren, störten mich nicht, aber eine Kuhherde, die vor mir auftauchte, verwirrte mich. Ich hupte laut, und die Kühe liefen rechts und links von der Straße in die Felder und machten mir den Weg frei. Der Hirt ärgerte sich so darüber, daß er sich zunächst nicht um die Kühe sondern nur um den Fahrer des Motorrads kümmerte. Er stellte sich an den Straßenrand, holte mit seiner langen Peitsche aus und erwartete mich so. Ich meinerseits hielt gerade auf ihn zu und zwang ihn so, sehr schnell in den Graben zu springen. Er versuchte, mich zu verfolgen, aber das war ja lächerlich. Auch seine Ausrufe bedeuteten nichts, weil ich sie im Lärm des Motors nicht verstand.

Die ganze Fahrt war prächtig, und es passierte nichts—bis zum Schluß. Ich war schon wieder im Dorf angelangt, als mir in einer Kurve ein hochgeladener Wagen daherkam. Ich mußte ausweichen, rutschte aus und brach in den Garten des Schulmeisters ein. Der Zaun krachte zusammen, das Rad und ich lagen am Boden, der Motor arbeitete noch kurze Zeit, gab noch einen Seufzer von sich und war dann still. Ich ließ das Rad liegen und rannte davon.

Was am nächsten Tag geschah, das ist eine andere Geschichte.

1959
SCOTTISH LEAVING CERTIFICATE EXAMINATION

GERMAN

HIGHER GRADE—(SECOND PAPER (a))

AURAL COMPREHENSION TEST

Tuesday, 10th March—1.30 P.M. to 2.0 P.M.

Answers are to be written on the sheet provided for the purpose, on which are also to be written any notes made between the readings.

QUESTIONS

Marks

1. What can the author tell us about the date of the invention of the motor bicycle?

Explain how he himself came to ride a motor bicycle for the first time. $2\frac{1}{2}$

2. For what reasons was he afraid to make the attempt? $2\frac{1}{2}$

3. (*a*) What did he first meet during his ride?

(*b*) What was the first real difficulty he had to face and how was it overcome? $2\frac{1}{2}$

4. Whose anger did the author arouse as a result?

State what this person tried to do and explain why his attempts were all unsuccessful. $3\frac{1}{2}$

5. Describe fully the incident which brought the author's ride to an end. How did the author act in this crisis? 4

15

(C64723)

1959

SCOTTISH LEAVING CERTIFICATE EXAMINATION

GERMAN

HIGHER GRADE—(SECOND PAPER (b))

Tuesday, 10th March—2.15 P.M. to 4.0 P.M.

N.B.—(1) Begin the answer (or fair copy of an answer) to each question on a fresh page.

Marks will be deducted for bad spelling and bad punctuation, and for writing that is difficult to read.

(2) The use of German script is optional.

The value attached to each question is shown in brackets after the question.

[TURN OVER

1. *Translate into German :—* *Marks*

Dr Anderson looked at the clock on his desk. It was twenty minutes to six. He was surprised that his patient had not yet arrived for this one was always punctual and should have been there at five-thirty.

The doctor himself did not look particularly healthy. He was tall and thin with narrow shoulders ; his face was without colour and his eyes, pale-blue and rather large, were weary. He was not more than fifty, but he seemed older.

He was now a very famous doctor but when the war broke out he had just finished his studies and he was immediately sent with the army to France. Only there did he discover his strange gift. With his cool hands and his soft voice he could calm men who were anxious and afraid. He needed only to tell them that they must rest, that they must not worry, that they must sleep, and to his own astonishment sleep fell on their tired eyes like the light rain of spring upon the dry earth. To one man he gave back speech, to a second hearing, and to a third the use of his legs. One miracle* followed another, although he himself was unable to explain them.

After the war he went to Frankfort and studied there ; finally he returned to London. People began to tell one another of the amazing things he had done and soon he had more patients than he had time to see.

* the miracle = das Wunder

(50)

2. Write, in German, an essay on **one** of the following subjects.

N.B.—Your composition should be from one to one and a half times the length of the translation of Question 1.

(*a*) Ich nehme eine Stellung während der Ferien an.

(*b*) Warum ich (nicht) auswandern möchte.
(auswandern = to emigrate)

(*c*) Gedanken über meine Zukunft. (25)

1959
SCOTTISH LEAVING CERTIFICATE EXAMINATION

SPANISH

LOWER GRADE—(PAPER (a))

AURAL COMPREHENSION TEST

Monday, 16th March—9.15 A.M to 9.45 A.M.

This paper must not be seen by any candidate.

INSTRUCTIONS TO THE TEACHER

1. Use the ten minutes preceding the beginning of the test to make yourself thoroughly familiar with the passage to be read.

2. When so instructed by the supervising officer, read to the candidates the " Instructions to Candidates " given below.

3. Then read the passage aloud to the candidates, speaking clearly and naturally, and taking not more than **four minutes** to the reading.

4. After this reading inform the candidates that they may now turn over the printed question papers, and that they will have three minutes in which to study the questions. Remind the candidates that they may make notes during this interval of three minutes, but only on the sheets provided for the answers. You yourself will not be allowed to see the questions which are to be answered by the candidates.

5. When so instructed by the supervising officer, read the passage a second time, in exactly the same manner as on the first occasion and taking the same amount of time.

6. Remind the candidates that the questions are to be answered in English.

[TURN OVER

INSTRUCTIONS TO CANDIDATES

1. Listen carefully to the following passage with a view to answering questions on its content.

2. The questions are to be answered in English.

3. You are on no account to touch the printed question paper or to do any writing until you are told to do so.

4. The procedure will be as follows :—

(i) The passage will be read **twice**, with an interval of three minutes between the readings.

(ii) After the first reading you will be allowed to turn over the printed question paper and you will have three minutes in which to study the questions.

(iii) After the second reading you will write your answers on the sheet provided for this purpose.

5. All writing during the first and second readings is **strictly forbidden.** Notes may be made during the interval between the readings, but only on the sheet provided for the answers.

6. You may not ask for the repetition of any word or phrase.

Passage to be read to the candidates : Maximum time of reading—four minutes.

Nuestra familia estaba siempre cambiando de casa. En cierta ocasión nos habíamos decidido a mudarnos otra vez y fuimos todos juntos a examinar otro domicilio. El propietario nos había asegurado que era de primera clase y que tenía una terraza maravillosa. En efecto, apenas llegamos allí, cuando mi madre se enamoró tanto de la casa que se resolvió en seguida a tomarla.

A la mañana siguiente esperábamos ya en la nueva casa que llegasen los de las mudanzas. A las ocho llegaron con los muebles en un gran carro. Aunque haya once personas en nuestra familia, tuvimos que hacer cuatro viajes cada una para traerlo todo. A las dos de la tarde todos nuestros muebles estaban colocados en la nueva casa. Entonces el tío Pedro fué a la ciudad para arreglar que dieran el agua, el gas y la electricidad, y aquella misma noche el agua corría por el grifo de la cocina, el gas ardía en el fogón, y la luz iluminaba todas las habitaciones.

Así empezamos a vivir en la nueva casa ; unos vivíamos dentro, otros en la terraza, y mi primo, José, pasaba su tiempo en el tejado, desde donde, según decía, se podía gozar de un bonito panorama.

Nos hubiera gustado la nueva casa, si no hubiese sido por una cosa. Por todas partes había hormigas que entraban del jardín por debajo de las puertas y por las ventanas. Las teníamos en los armarios, en la ropa, y hasta en lo que comíamos. Les dábamos caza, pisándolas con los pies y echándoles agua encima. Pero finalmente comprendimos que era mejor dejar los pobres insectos en paz ; en realidad, se contentaban con que los dejásemos ir y venir.

Así pasamos dos meses. Un día se presentó el amo de la casa, diciendo que venía a cobrar el alquiler.

— ¡ Pagar el alquiler ! — dijo la madre. — ¡ Qué disparate ! ¡ Pero si la casa está llena de hormigas ! No pagamos nada.

Y al día siguiente cogimos los muebles y nos marchamos muy enfadados.

1959

SCOTTISH LEAVING CERTIFICATE EXAMINATION

SPANISH

LOWER GRADE—(PAPER (a))

AURAL COMPREHENSION TEST

Monday, 16th March—9.15 A.M. to 9.45 A.M.

Answers are to be written on the sheet provided for the purpose, on which are also to be written any notes made between the readings.

QUESTIONS

	Marks
1. How did the owner of the prospective new house recommend it ?	1
2. When the author's mother saw it, what were her reactions ?	1
3. How and by whom was the furniture brought and unloaded ? How long did the unloading last ?	3
4. What job did Uncle Peter undertake after the removal ? What were the results of his efforts ?	2½
5. In which parts of the house did the various members of the family choose to spend their time ? What reason did Joseph have for his choice ?	1½
6. (*a*) What nuisance did the family discover in the new house ? (*b*) What was the extent of this nuisance, and how did the family try to combat it ? (*c*) What attitude to this nuisance did the family eventually take up, and for what reason ?	5
7. How long did the family live in the new house ? How was their stay brought to an end ?	1
	15

(C64770)

S

N.

1.

de
ab
en
y

el
a
m

los
co
se
ca
al
ar

dr
re
co

1959
SCOTTISH LEAVING CERTIFICATE EXAMINATION

SPANISH

LOWER GRADE—(PAPER (b))

Monday, 16th March—10.0 A.M. to 12.15 P.M.

N.B.—Begin the answer (or fair copy of an answer) to each question on a fresh page.

Marks will be deducted for bad spelling and bad punctuation, and for writing that is difficult to read.

The value attached to each question is shown in brackets after the question.

1. Translate carefully, with due attention to English form and expression :—

The Opening Lecture

Eran las diez de la mañana de un día de octubre. En el patio de la Escuela de Medicina grupos de estudiantes esperaban con impaciencia hasta que abriera la clase. Iban entrando en el patio otros muchos jóvenes que, al encontrarse, se saludaban, reían y hablaban. Eran todos futuros médicos y farmacéuticos que iban a estudiar la química general del año preparatorio.

Su impaciencia para entrar en el aula se explicaba fácilmente por ser aquél el primer día del curso y del comienzo de su carrera, pues el paso del instituto a la universidad siempre da al estudiante ciertas ilusiones y le hace creerse más hombre y que su vida ha de cambiarse inevitablemente.

A unos pocos minutos después de abrirse las puertas los alumnos llenaron los bancos casi hasta arriba y, como había mucha gente impetuosa, algunos comenzaron a dar golpes en el suelo con el pie ; otros los imitaron y finalmente se produjo un furioso ruido. De pronto se abrió una puertecilla y apareció el catedrático viejo, con el pelo blanco y una barba puntiaguda que le temblaba al hablar. Había estudiado en París, donde había adquirido las posturas artificiales del francés impaciente.

El buen señor empezó un discurso de salutación a sus alumnos, muy enfático, dramático y sentimental. Una hora más tarde, cuando terminó la clase, se retiró, después de hacer un saludo ceremonioso, y los estudiantes aplaudieron con entusiasmo. **(30)**

[TURN OVER

2. Read the passage below, then answer the questions which follow it.

N.B.—The passage is NOT to be translated.

Pipá, the mischief-maker

Nadie se acuerda de Pipá y, sin embargo, hizo un papel importante en la comedia humana de su aldea natal. Era un chico de doce años que nunca había conocido a sus padres y por eso no tenía recursos fuera de sí mismo. Iba siempre vestido de trapos y carecía muchas veces de comida. Poseía un carácter travieso que le inclinaba a hacer bromas, y claro que eso le quitaba la simpatía de mucha gente. Pero guardaba bien oculta en el corazón una bondad innata.

Una tarde de invierno, Pipá, con las manos en los bolsillos — si sus pantalones los hubiesen tenido — pero, en fin, con las manos dentro de aquellos agujeros que le servían de bolsillos, contemplaba cómo caía la nieve silenciosa sobre la calle de su pueblo. Estando muy dado a fantasías, Pipá, que pasaba no pocas noches afuera, estaba imaginando cómo la nieve le hacía una cama, echando una sábana limpia sobre que pudiese descansar. En realidad, Pipá tenía frío, y no tenía fuego a que calentarse. Pero pensaba que podría calentarse las manos arrojando unas bolas de nieve a los transeuntes, porque Pipá creía que la nieve calienta las manos a fuerza del frío. Lo que él necesitaba más que nada en este momento era un motivo para escaparse de alguna fuerza mayor, como por ejemplo de un policía, para hacerle correr, así calentándose.

Pues en este mismo instante apareció la señora Sofía, la lavandera de la aldea, como para dar diversión a Pipá. Como un lobo que ve en las montañas nevadas una oveja aparte de las otras, Pipá formó su plan. Se acercó por detrás a la lavandera poco sospechosa y, con un toque ligero, hizo venir a tierra la cesta bien llena de ropa lavada que traía la lavandera en la cabeza. Entonces, con la rapidez que da la práctica, escogió un gorro de dormir adornado con rosas y, poniéndoselo en la cabeza y parte de la cara, corrió a toda prisa a la plaza, donde se juntó con las máscaras, pues iba celebrándose el Carnaval en la aldea.

Así mezclándose con la gente que se divertía en la plaza, Pipá se calentó y, al mismo tiempo, logró escaparse de la lavandera furiosa.

Questions

Marks

A.—**Answer in English :—**

1. (*a*) Who was Pipá ?

   (*b*) " . . . no tenía recursos fuera de sí mismo." (line 3)
   What does this mean and what gave rise to this situation ? **2**

2. How is Pipá's poverty indicated ? **3½**

3. (*a*) What were his main characteristics ?

   (*b*) Explain the effect which one of these characteristics had on other people.

   (*c*) Show how another one is illustrated in paragraph 2. **4½**

4. What humorous suggestions are made as to how Pipá might overcome the cold on the afternoon in question ? **3½**

5. Why did Pipá welcome Mrs. Sofia's approach ?

   What was she doing ?

   What trick did he play on her, and for what reasons was he able to carry it out ? **4½**

6. (*a*) To what is Pipá compared at the beginning of this incident ? (paragraph 3)

   Why is this comparison appropriate ?

   (*b*) How did Pipá turn the incident to his advantage, and what benefits did he gain ? **5½**

B.—**Answer in Spanish :—**

7. ¿ Qué significa " su aldea natal " ? (line 2) **1½**

8. ¿ Para qué sirve un bolsillo ? (line 8) **2**

9. ¿ Qué se hace durante el Carnaval ? **3**

30

3. Write, in Spanish, a continuous story based on the following summary.

N.B.—Your story should be about 200 words in length (i.e., about four-fifths the length of the translation of Question 1). Use appropriate PAST tenses.

En un parque dos niños se hacen amigos de un perro — llevan al perro a su casa por una noche — el próximo día la dueña (owner) los encuentra con el perro — explicaciones. **(25)**

S

N.

1.

A
Be
era
el
de
ost
de
orr
del

A
de
que
exp
enf

V
en

—
lo
cue

—

1959
SCOTTISH LEAVING CERTIFICATE EXAMINATION

SPANISH

HIGHER GRADE—(FIRST PAPER)

Monday, 16th March—10.0 a.m. to 12.15 p.m.

N.B.—Begin the answer (or fair copy of an answer) to each question on a fresh page.

Marks will be deducted for bad spelling and bad punctuation, and for writing that is difficult to read.

The value attached to each question is shown in brackets after the question.

1. Translate carefully, with due attention to English form and expression :—

Benina, Doña Francisca's maid, visits Don Carlos

A la hora fijada por D. Carlos, ni minuto más ni minuto menos, llamaba Benina a la puerta de la casa, y una criada la introdujo en el despacho, que era muy elegante, con todos los muebles iguales en color y hechura. Ocupaba el centro una mesa de trabajo cubierta con libros y papeles. Los libros no eran de leer sino de cuentas, todo muy limpio y ordenado con esmero. Una pared ostentaba el retrato de Doña Beatriz, esposa de D. Carlos, en marco que parecía de oro puro. Sobre la chimenea, nunca encendida, había un reloj de bronce ornado, que no andaba, y no lejos de allí un almanaque americano en la fecha del día anterior.

Al medio minuto de espera entró D. Carlos arrastrando los pies, con gorra de terciopelo calada hasta las orejas, y una capa de andar por casa más vieja que la que usaba para salir. El uso continuo de este artículo de vestido se explicó por su odio de estufas y braseros que, según él, eran las causas de muchas enfermedades.

Viendo a Benina a pie, la mandó sentarse con un gesto, y Benina se descansó en el borde de una silla de roble con un asiento de raso verde.

— Pues — dijo D. Carlos, — la he llamado a Vd., Benina, para decirle que lo que pasa a su ama, Doña Francisca, es porque no ha querido ella llevar cuentas. Con orden, los pobres se hacen ricos. Sin orden, los ricos . . . —

— . . . paran en pobres, sí señor, — acabó humildemente Benina. **(30)**

[TURN OVER

2. Read carefully the passage given below, then answer the questions which follow it.

N.B.—The passage is NOT to be translated.

The Beggar's Song

Mío es el mundo, como el aire libre,
Otros trabajan porque coma yo ;
Todos se ablandan si doliente pido
Una limosna por amor de Dios.
5 El palacio, la cabaña son mi asilo,
Si del ábrego[1] el furor
Troncha el roble en la montaña,
O que inunda la campaña
El torrente asolador.
10 Y a la hoguera me hacen lado
Los pastores con amor,
Y sin pena y descuidado,
De su cena ceno yo.
O en la rica chimenea,
15 Que recrea con su olor,
Me regalo, codicioso
Del banquete suntuoso,
Con las sobras de un señor.
Todos son mis bienhechores, y por todos
20 A Dios ruego con fervor ;
De villanos y señores
Yo recibo los favores
Sin estima y sin amor,
Ni pregunto quienes sean,
25 Ni me obligo a agradecer ;
Que mis rezos si desean,
Dar limosna es un deber
Y es pecado la riqueza,
La pobreza santidad ;
30 Dios a veces es mendigo,
Y al avaro da castigo,
Que le niegue caridad.
Yo soy pobre y se lastiman
Todos al verme plañir[2],
35 Sin ver son mías sus riquezas todas,
Que mina inagotable es el pedir.

Y para mí no hay *mañana*, ni hay *ayer* ;
Olvido el bien como el mal,
Nada me aflige ni afana ;
40 Me es igual para mañana
Un palacio, un hospital.
Vivo ajeno de memorias,
De cuidados libre estoy ;
Busquen otros oro y glorias,
45 Yo no pienso sino en hoy.

[1] ábrego = viento sudoeste
[2] plañir = gemir y llorar

Questions

A.—**Answer in English :—** *Marks*

1. " Todos son mis bienhechores . . . " (line 19)

   " Que mina inagotable es el pedir." (line 36)

   (*a*) These two lines, taken together, give the major part of the beggar's philosophy of life. Explain their full meaning in this context.

   (*b*) What other parts of the poem convey almost the same ideas ?

   (*c*) What examples are given to illustrate these ideas ? (Give details.) **11**

2. What indications are there of the methods employed by the beggar in his calling ? **3**

3. For what reasons does he feel that he is under no obligation to anyone ? **3½**

4. " Y para mí no hay *mañana*, ni hay *ayer* ; " (line 37)
   What does the beggar mean by this statement ?
   How is this idea developed in the lines which follow ? **6**

5. The poet describes certain aspects of Nature. What details does he choose and for what purpose does he introduce these descriptions ? **3½**

B.—**Answer in Spanish:—**

6. " . . . la rica chimenea,
   . . . recrea con su olor," (lines 14, 15)
   Explíquese esta frase. **3**

30

3. Translate carefully, with due attention to English form and expression :—

A Contrast

Siempre que Pedro pensaba en Santillana del Mar, le parecía que en aquel rincón del mundo la rueda del tiempo se había parado. Las horas resbalaban grises, monótonas, como largos bostezos, lo mismo que los años y aún los siglos sin dejar trazas. Del mismo modo se sucedían uniformes las generaciones con las mismas ideas, las mismas creencias, las mismas cosas. Un sentimiento de eternidad dominaba la aldea ; andaban los aldeanos tranquilamente, sin prisa, como si todos los trabajos estuviesen cumplidos, como si no hubiese más remedio que esperar perpetuamente. Las calles estaban siempre desiertas ; las casas parecían deshabitadas.

Ahora, después de diez años de viajar, Pedro iba a ver otra vez a Santillana. Pero, a su llegada encontró nuevas y extraordinarias sorpresas. Diríase que se había rejuvenecido la vieja Santillana. Se mostraba populosa y bullidora, bien diferente de su estado en los días de su decadencia. Grandes palacios y altas torres dominaban sus bien arregladas casas. Una muchedumbre de todas clases circulaba por calles y plazas, llenándolas de voces alegres que producían una impresión de buen humor. Por todas partes se veían evidencias de una vida activa y gozosa. Pedro se quedó atónito ante la maravillosa resurrección de Santillana de entre los muertos. **(25)**

th

"

na

th
stu
thi
Yo
by

tim
am

1959
SCOTTISH LEAVING CERTIFICATE EXAMINATION

SPANISH

HIGHER GRADE—(Second Paper (a))

AURAL COMPREHENSION TEST

Monday, 16th March—1.30 P.M. to 2.0 P.M.

This paper must not be seen by any candidate.

INSTRUCTIONS TO THE TEACHER

1. Use the ten minutes preceding the beginning of the test to make yourself thoroughly familiar with the passage to be read.

2. When so instructed by the supervising officer, read to the candidates the "Instructions to Candidates" given below.

3. Then read the passage aloud to the candidates, speaking clearly and naturally, and taking not more than **four minutes** to the reading.

4. After this reading inform the candidates that they may now turn over the printed question papers, and that they will have three minutes in which to study the questions. Remind the candidates that they may make notes during this interval of three minutes, but only on the sheets provided for the answers. You yourself will not be allowed to see the questions which are to be answered by the candidates.

5. When so instructed by the supervising officer, read the passage a second time, in exactly the same manner as on the first occasion and taking the same amount of time.

6. Remind the candidates that the questions are to be answered in English.

[TURN OVER

INSTRUCTIONS TO CANDIDATES

1. Listen carefully to the following passage with a view to answering questions on its content.

2. The questions are to be answered in English.

3. You are on no account to touch the printed question paper or to do any writing until you are told to do so.

4. The procedure will be as follows :—

(i) The passage will be read **twice,** with an interval of three minutes between the readings.

(ii) After the first reading you will be allowed to turn over the printed question paper and you will have three minutes in which to study the questions.

(iii) After the second reading you will write your answers on the sheet provided for this purpose.

5. All writing during the first and second readings is **strictly forbidden.** Notes may be made during the interval between the readings, but only on the sheet provided for the answers.

6. You may not ask for the repetition of any word or phrase.

Passage to be read to the candidates (Maximum time of reading—four minutes):—

Al fin, después de seis años de estudiar en Madrid, Andrés se hizo médico. Desde hacía mucho tiempo decía que si tuviese dinero, iría a viajar por mundo, pero no tenía dinero ni tampoco un puesto en que ganar dinero.

Un día leyó en un periódico que un médico en la provincia de Burgos necesitaba un substituto por dos meses. Andrés escribió y le aceptaron. Puesto que sus padres querían que trabajase cerca de la casa, les dijo que un amigo suyo le había convidado a pasar unas semanas con él en un pueblo del norte. Tomó un billete de ida y vuelta y se fué. El médico a quien tenía que substituir era un hombre rico, viudo y dedicado a estudiar las monedas. Sabía poco de medicina, y no tenía afición más que para la historia de las monedas.

— Aquí no podrá Vd. hacerse famoso con ciencia médica, — le dijo a Andrés burlonamente. — Aquí, sobre todo en el verano, no tenemos muchos enfermos; unos casos de fiebre, algunos accidentes en las minas, y poco más. —

El médico pasó rápidamente de esta cuestión profesional, que no le interesaba, a sus monedas, y enseñó a Andrés su colección, la segunda en la provincia. Al decir *la segunda,* suspiraba profundamente, dando a entender lo triste que era para él admitir que no era la primera.

Andrés le gustó mucho al médico. Por esta razón dijo que si Andrés quería vivir en su casa en su ausencia, se la ofrecía con mucho gusto, y Andrés se quedó allí en compañía de una criada vieja.

El verano fué para Andrés delicioso ; el día entero lo tenía libre para pasear y para leer. Había cerca del pueblo un monte, en cuyas rocas crecía una riqueza de flores, y allí se divertía durante el día. Al anochecer regresaba a casa y pasaba unas horas agradables leyendo en paz sus libros preferidos.

Llevaba un mes y medio en este puesto atractivo cuando el cartero le entregó una carta en que su padre le mandaba que volviese a Madrid. Tuvo que obedecer.

1959
SCOTTISH LEAVING CERTIFICATE EXAMINATION

SPANISH

HIGHER GRADE—(Second Paper (a))

AURAL COMPREHENSION TEST

Monday, 16th March—1.30 P.M. to 2.0 P.M.

Answers are to be written on the sheet provided for the purpose, on which are also to be written any notes made between the readings.

QUESTIONS

	Marks
1. What special ambition did Andrew have, and for what reasons had he not been able to fulfil it ?	1½
2. (*a*) How did he find a post ?	
(*b*) What kind of post was it, where was it, and how long was it to last ?	2
3. What did Andrew tell his parents he was going to do, and why ?	2
4. What was the main interest of the doctor who employed Andrew ? What admission did he make in connexion with this interest ?	1½
5. (*a*) What was the extent of the doctor's medical knowledge ?	
(*b*) How much medical experience was Andrew likely to obtain in this post ? Give details.	2
6. What proof did the doctor give of his liking for Andrew ?	1½
7. For what reasons did Andrew find his post very much to his taste ?	3½
8. Why did he give up his post ?	1
	15

(C64774)

1959

SCOTTISH LEAVING CERTIFICATE EXAMINATION

SPANISH

HIGHER GRADE—(SECOND PAPER (b))

Monday, 16th March—2.15 P.M. to 4.0 P.M.

N.B.—Begin the answer (or fair copy of an answer) to each question on a fresh page.

Marks will be deducted for writing that is difficult to read.

The value attached to each question is shown in brackets after the question.

1. Translate into Spanish :—

One evening towards the end of June, I wrote the last lines of the last page of my History, while sitting in the garden. After laying my pen upon the table, I rose and walked slowly along one of the garden paths, from which I had an extensive view of the surrounding countryside, the lake, and the well-wooded mountains. I do not think I shall ever be able to forget that night. It will remain in my heart forever. The air was neither cold nor warm, the sky was serene and dotted* with stars. The silver circle of the moon was reflected on the tranquil surface of the water ; everything was silent. I must confess that I did not try to hide the first feelings of joy that I experienced, on realizing that at last I had won my freedom. But my pride did not last long, for a quiet sadness took possession of my mind, when it suddenly occurred to me that I had said good-bye to an old and agreeable companion, and that, whatever might be the success of the History, the life of the writer was likely to be brief.

About a month later, I set out for England with my precious burden. I arrived in London in the month of November, but scarcely had I set foot in the capital when my old illness returned. I at once prepared to publish the six volumes. **(50)**

*dotted = salpicado.

2. Write, in Spanish, an essay on **ONE** of the following subjects :—

Your essay should be from one to one and a half times the length of the translation of Question 1.

(*a*) Una descripción de su pueblo o aldea natal.

(*b*) Una aventura verdadera o imaginaria.

(*c*) Unos animales que he conocido. **(25)**

(C64775)

1959

SCOTTISH LEAVING CERTIFICATE EXAMINATION

GAELIC

LOWER GRADE—(PAPER (a))

AURAL COMPREHENSION TEST

Monday, 16th March—9.15 A.M. to 9.45 A.M.

This paper must not be seen by any candidate.

INSTRUCTIONS TO THE TEACHER

1. Use the ten minutes preceding the beginning of the test to make yourself thoroughly familiar with the passage to be read.

2. When so instructed by the supervising officer, read to the candidates the "Instructions to Candidates" given below.

3. Then read the passage aloud to the candidates, speaking clearly and naturally, and taking not more than **four minutes** to the reading.

4. After this reading inform the candidates that they may now turn over the printed question papers, and that they will have three minutes in which to study the questions. Remind the candidates that they may make notes during this interval of three minutes, but only on the sheets provided for the answers. You yourself will not be allowed to see the questions which are to be answered by the candidates.

5. When so instructed by the supervising officer, read the passage a second time, in exactly the same manner as on the first occasion and taking the same amount of time.

6. Remind the candidates that the questions are to be answered in English.

INSTRUCTIONS TO CANDIDATES

1. Listen carefully to the following passage with a view to answering questions on its content.

2. The questions are to be answered in English.

3. You are on no account to touch the printed question paper or to do any writing until you are told to do so.

[TURN OVER

4. The procedure will be as follows :—

(i) The passage will be read **twice**, with an interval of three minutes between the readings.

(ii) After the first reading you will be allowed to turn over the printed question paper and you will have three minutes in which to study the questions.

(iii) After the second reading you will write your answers on the sheet provided for this purpose.

5. All writing during the first and second readings is **strictly forbidden.** Notes may be made during the interval between the readings, but only on the sheet provided for the answers.

6. You may not ask for the repetition of any word or phrase.

Passage to be read to the candidates (maximum time of reading—four minutes) :—

Beagan ùine an déidh sin thàinig tàillear crùbach a dh' obair do thigh Dhòmhnaill. 'S e àm an fhoghair a bh' ann, nuair a bha iad gu math dripeil ris a' bhuain. Agus an déidh am biadh maidne, thuirt Seònaid, bean Dhòmhnaill, ris an tàillear e a bhith cho math 's a shùil a chumail air an fhear a bha anns a' chreithil, gus an tigeadh iad dhachaidh bho 'n bhuain ; " ach," ars' ise, " ged a bhiodh e rànaich 's a' caoineadh, na leig dad ort ; sin a thoil-inntinn."

Bha nis an tigh aig an tàillear chrùbach agus aig an fhear bheag dhaibh fhéin. A h-uile greim a bheireadh an tàillear 's a' chòta, bheireadh e sùil air an fhear bheag, agus bheireadh am fear beag sùil cho guineach air an tàillear.

Mu dheireadh chaidh e air uilinn 's a' chreithil agus sheall e gu colgarra air feadh an tighe, agus nuair a chunnaic e nach robh a stigh ach iad féin, thionndaidh e ris an tàillear, agus ars' esan, le guth fearail, " Am bheil duine stigh ach thu fhéin ? " " Matà," ars' an tàillear, " tha mi faicinn nach eil, agus tha mi glé choma ged nach bithinn fhéin a stigh." " Na biodh eagal sam bith ort," ars' am fear beag, " cha chuir mise corrag ort." " Chan e cudthrom do chorraig a tha cur eagail orm," ars' an tàillear, " ach co-dhiù, bu cho maith leam a bhith trì mìle á so." " Coma leat," ars' am fear beag ; " ach ma gheallas tu dhomh nach innis thu orm e, bheir mi dhuit an t-aon phort piob-aireachd as brèagha chual thu riamh." " So, matà," ars' an tàillear, " suas e."

Thug am fear beag a mach feadan caol dubh a bha fo dhruim 's a' chreithil, agus thòisich e air cluiche. 'S ma thòisich—a leithid de cheòl cha chual an tàillear crùbach riamh. Stob e 'n t-snàthad 's a' chòta agus chuir e a chasan bac air bhac, 's a làmh fo leth-cheann ag éisdeachd a' chiùil.

1959
SCOTTISH LEAVING CERTIFICATE EXAMINATION

GAELIC

LOWER GRADE—(PAPER (a))

AURAL COMPREHENSION TEST

Monday, 16th March—9.15 A.M. to 9.45 A.M.

Answers are to be written on the sheet provided for the purpose, on which are also to be written any notes made between the readings.

QUESTIONS

	Marks
1. Describe the visitor to Donald's home, and tell the time of year when he arrived.	2
2. What special favour was asked of him, and what surprising instructions did he receive ?	3
3. How did the visitor and his ward react to one another ?	2
4. When the latter realized that they were alone, what question did he ask, and what answer did he get ?	2
5. Show that the visitor was alarmed.	1
6. What promise was made to the visitor, and on what condition ?	2
7. Describe what happened after the promise was made, and show that the visitor was satisfied.	3
	15

(C64307)

1959
SCOTTISH LEAVING CERTIFICATE EXAMINATION

GAELIC

LOWER GRADE—(PAPER (b))

Monday, 16th March—10.0 A.M. to 12.15 P.M.

N.B.—Begin the answer (or fair copy of an answer) to each question on a fresh page.
Marks will be deducted for bad spelling and bad punctuation, and for writing that is difficult to read.

The value attached to each question is shown in brackets after the question.

1. Translate into English :—

Gheibhear an sionnach cha mhór anns gach ceàrn de 'n domhain. Buinidh e do 'n aon seòrsa ris a' mhadadh. Tha a dhath donn, a bheul biorach, a chluasan àrd agus dìreach, agus earball fada, dosach agus breac.

Tha an toll anns a bheil e a' gabhail còmhnaidh am bitheantas fo 'n talamh no ann an sgoraibh chreag. Chan fhàg e a gharadh gu feasgar; agus an sin théid e a mach air feadh nan coilltean agus an fhearainn airson cobhartaich, agus faiaidh e a muigh gu madainn.

'S e is biadh dha a' mhaigheach, an coinean, cearcan agus eunlaith de gach seòrsa. Ithidh e mar an ceudna faimh, radain agus luchainn; agus tha e ro dhéidheil air ùbhlaibh agus air gach gnè meas. Ged tha an sionnach ro dhiùbhalach[1] am measg eunlaith agus uan, tha e a' deanamh feum mhór le bhith cur as do iomadh creutair millteach agus gràineil.

Ann an Sasunn tha an sionnach a' toirt mór-shùgradh agus aighear do luchd-seilg. Tha na sealgairean a' marcach 'na dhéidh agus 'ga ruagadh le madraidh; agus is tric a sgìthicheas e na coin, na h-eich agus a na sealgairean; agus faodaidh e a bhith, an déidh dhaibh a leantainn car leth-cheud mìle, gun toir e an car asda mu dheireadh, gun ruig e ionad-falaich agus gun tèaruinn e a bheatha. **(30)**

[1] ddiùbhalach = destructive.

[TURN OVER

2. Read the poem below, then answer the questions which follow it :—

N.B.—The poem is NOT to be translated.

An raoir bhruadair mi 'm chadal
Mi bhith 'm folach 'san luachair,
'S a bhith cur mo làmh tharad
'S ann a dh' fhairich mi bhuam thu.
5 Gun tug sud orm briosgadh ;
'S mór is misde mo shnuadh e !
Nuair nach d'fhuaras thud agam,
A lùb ghasda 'n robh suairceas.

B' òg, fìnealta, deas thu,
10 Bian glas air do ghualainn,
'S tric a chuir thu gu stòras
Còta 'n daimh ghruamaich,
Le gunna bheòil thana,
Chuireadh sgainneart o luaidhe ;
15 Nach do dhiùlt a riamh teine
Ri eilid nam fuar bheann ;
No ri damh a' chinn chabraich,
No ri lach a' chinn uaine,
No ri fìr-eun a' chreachainn,
20 ('S tu nach cleachdadh dhaibh suaimhneas !)
No sionnach na sgàirnich—
'S e nach teàrnadh o d' luaidhe.

Lùb ùr thu Chloinn Chaluim,
'S gum bu bharraicht measg sluaigh thu.
25 Laigh gruaim air MacCailein,
Nuair a dh'fhairich e uaith thu.
Gur e sud an sgeul deurach,
Gun a cheum aig a' bhuachaill.
Gur e sud mo sgeul deacair,
30 Gun do thaisg iad 's Taobh Tuath thu.
'S ann an cladh Chinn a' Ghiùthsaich
A rùisg iad an uaigh dhuit.
'S truagh nach robh fir do dhùthcha
'Gad ghiùlan air ghualainn,
35 'S nach robh i bean t' fhàrdaich
'S a' ghàirich mun cuairt duit.

QUESTIONS

Notes to Candidates

(a) The answers to the following questions may be in either Gaelic or English except when otherwise indicated.

(b) Arabic numerals, within brackets, refer to lines.

Marks

1. State, very briefly, the main theme of the poem. **2**

2. What information is given regarding the name or clan of the subject of the poem ? **1**

3. Who was his employer, and what was the nature of his employment ? **2**

4. Mention four facts from the description given of him. **2**

5. What birds and beasts did he hunt ? Describe the weapon used. **5**

6. Give in detail the reasons for grief expressed in the last four lines. **4**

7. Where did the burial referred to take place ? Give the meaning of the place-name. **3**

8. Give in English the exact meaning of :—

   Gun tug sud orm briosgadh (5)
   A lùb ghasda 'n robh suairceas (8)
   Nach do dhiùlt a riamh teine (15)
   'S e nach teàrnadh o d' luaidhe (22)
   Gun a cheum aig a' bhuachaill (28) **5**

9. (i) Give the genitive singular and the gender of làmh, gualainn, sgeul ;

   (ii) construct phrases illustrating the comparative degree of the adjectives òg, deas, deurach ;

   (iii) comment on the forms bhuam (4), misde (6), dhuit (32). **6**

30

3. Write, in Gaelic, an essay of about a page and a half in length on any one of the following subjects :—

(*a*) Mo chuairt shamhraidh.

(*b*) Sgeul a thug gàire orm.

(*c*) An cur-seachad ùine as docha leam. **(25)**

1959

SCOTTISH LEAVING CERTIFICATE EXAMINATION

GAELIC

HIGHER GRADE—(FIRST PAPER (a))

Monday, 16th March—10.0 A.M. to 12 NOON.

N.B.—Begin the answer (or fair copy of an answer) to each question on a fresh page.

Marks will be deducted for bad spelling and bad punctuation, and for writing that is difficult to read.

The value attached to each question is shown in brackets after the question.

1. (*a*) Translate into idiomatic English :—

Tha dlùth air ceithir mìle seanfhacal Gàidhlig againn ann an leabhar a chaidh a chur an clò o chionn suas ri ceithir fichead bliadhna. Chualas iomadh seanfhacal air bilean an t-sluaigh nach deach a riamh a sgrìobhadh. Tha mar sin saidhbhreas eòlais, géirid, agus gliocais aig na Gaidheil ri an làimh nach ceannaichte le òr. So an saidhbhreas nach do chrìon le meirg agus nach do chaochail ro mhór le aois. Tha na seanfhacail beò, siùbhlach, móran diubh, gus an là an diugh an cainnt na dachaidh. Is ann leotha a chuireas an seann laoch crìoch air an argumaid as déineasaiche, agus a chàireas e a' chlach mhullaich air a' chomhairle as luachmhoire. Is ann leotha a bheir e misneachd làidir dha fhéin an àm dearbhaidh, agus a bheir e comhfhurtachd do 'n fheumnach 'na theinn.

Gheibhear seanfhacail air feadh na Gaidhealtachd agus na Galldachd de 'n aon chumadh, leis an aon bhrìgh, agus leis an aon bhuaidh. Có as a thàinig iad? An ann am fonn na Beurla a dh' fhàs iad, no an robh am freumhan an toiseach an oighreachd na Gàidhlig? Tha aon nì cinnteach. B' i a' Ghàidhlig a' chainnt mhàthaireil air feadh mór-roinn na h-Albann fada mus do thaom na Goill a steach innte o dheas, agus far an robh a' Ghàidhlig bha seanfhacail.

Far am faighear seanfhacail a dh' fhàs ann am fonn dùthchail lorgar annta sgàthan far am faicear dòighean is beachdan, rùintean is roghainn an luchd-àitich; agus gheibhear annta ma chladhaichear domhain gu leòir, sgòid mhath de eachdraidh an t-sluaigh—na nithean air an robh an aire, na subhailcean a bha ionmholta 'nan sealladh, an t-àite a bha aig mithean is maithean an inntinn dhaoine, agus an tùr no an t-amaideas a bha 'gan comharrachadh a mach mar shluagh. **(28)**

[TURN OVER

1. (*b*) Translate into idiomatic English :—

Rugadh Calum a' Ghlinne aig inbhir aon de na h-aibhnichean lùbach, leumnach a chithear air feadh na Gàidhealtachd, a' deothal gu tràigh uisgeachan nan allt is nan tobraichean a tha sìor shruthadh leis na leathadan bho chàthar nam blàr is bho chreagan aosda nam beann. Bha a phàrantan le chéile measail 'nan inbhe féin. A thaobh an crannchur saoghalta, cha robh iad aon chuid bochd no saidhbhir ; bha gabhaltas cuimseach aca anns a' ghleann—bàrr is crodh is caoirich. Bha iad iomraiteach a thaobh am fialaidheachd ; bha an dorus fosgailte, agus am bòrd luchdaichte o mhoch gu anmoch do choigrich is do luchd turuis, ciod air bith àirde o 'n tigeadh iad.

Bha iad adhartach, dèanadach, cùramach, 'nan gairm ; sìmplidh, iriosal 'nan caithe-beatha, 'nan éideadh is 'nan cleachdaidhean. Bha an gabhaltas daor-mhàlach gu leòir. Cha robh crodh is caoirich is clòimh ach ro-ìosal am prìs an coimeas ris mar tha iad anns na làithibh so ; aig ceann gach leth-bhliadhna nuair a phàighte am màl, cha bhiodh ach glé bheag airgid ma seach gu bhith solar gach goireas agus comhfhurtachd a bha feumail do 'n teaghlach. Ach ma bha an t-airgead gann bha an cosdas d' a réir ; rachadh punnd Sasunnach aig an àm ud na b' fhaide na théid deich dhiubh air an latha an diugh ann an solar uireasbhuidhean coitchionn theaghlaichean. (22)

2. Read the poem below, then answer the questions which follow it :—

N.B.—The poem is NOT to be translated.

Luinneag Mhic Neachdainn

Ge b' e thagradh ann an strì ort,
Gu dearbh cha b' fhada gun dol sìos e ;
Dh' éireadh Gòrdanaich leat dìleas,
Luchd nan trùpa gorma cruidheach ;
5 'S lìonmhor aca pasgan phìcean,
'S lìonmhor brataichean is pìoban,
'S lìonmhor clogaid is cuilìobhair,
'S lìonmhor bogha 's saighead dhìreach,
'S lìonmhor dag is sgian phrìseil,
10 'S lìonmhor spàinnteach air thaobh clì orr',
Glac an iubhair ann am bian-ghlaic.

Ge b' e thagradh ort gun reusan,
Bu chàm a' chòmhdhail da nuair dh' éireadh ;
Thig ioma cònnspunn leat á Eirinn,
15 Thig Iarl Andruim nan each ceumnach
Bheir a bhàrcan is cóig ceud leis,
'S ioma curaidh calma treubhach
Thig á Ile ort 'nan déidh sud,
Thig Luing is Saoil an adhbhar t' fheirge.

20 Chan iongnadh dhuitse bhith éibhinn :
'S ioma sruthan bras fo d' léinidh
De shìol nan curainne gleusda,
Car thu Dhuibhne, Cholla, Sheumas,
Shomhairle Bhuidhe nan geur-lann,
25 'S do Dhòmhnall Gorm a bha 'n Sléibhte,
Car thu Dhonncha Ruadh na Féile.

'S ionmhuinn leam Iain as òige,
Calpa deas air thùs na tòrach,
'S math thig lùireach dhuit is gòrsaid,
30 Agus léine 'n anairt Thòlaind,
Còta goirid air òradh,
'S bonaid bhreac nan caitein gorma,
'S breacan nan triuchana bòidheach.

'S Neachdannach do shloinne dìreach,
35 'S cha b' ann an cagar os n-ìseal ;
Tha thu shliochd nam Moireacha prìseil
Dhèanadh luchd-ealaidh dhìoladh.

Dh' éireadh leat sud ann ad chabhaig :
Alasdair Dubh Ghlinne Garaidh,
40 Triath na Lùib 's na Learga mar ris,
'S am Mèinnearach gun ghaog mar charaid,
Ogha Dhonncha Duibh a' Bhealaich,
Is Mac Phàrlain as an Arar,
'S Mac Laomainn o thaobh na mara.

QUESTIONS

Notes to candidates.

(*a*) The answers to the following questions may be in either Gaelic or English except when otherwise indicated.

(*b*) Arabic numerals within brackets refer to lines.

	Marks
1. Describe the arms and battle-array of the Gordons.	5
2. Who in addition to the Gordons were MacNaughton's allies ?	4
3. Give a list of MacNaughton's relatives.	3
4. Describe in detail John MacNaughton's dress.	4
5. Suggest an approximate dating of the poem, giving the reasons for your answer.	2
6. Translate into English :— (*a*) Glac an iubhair ann am bian-ghlaic (11). (*b*) Ge b' e thagradh ort gun reusan (12). (*c*) 'S ioma sruthan bras fo d' léinidh (21). (*d*) Dhèanadh luchd-ealaidh dhìoladh (37).	6
7. Comment on the two idiomatic usages of *ort* in the second stanza.	2
8. Locate :— Luing, Sléibhte, Gleann Garaidh, Bealach.	2
9. Write a note on the metrical pattern of the poem.	2
	30

S

th

th

na

the
to
du
ans
ans

tim
am

1959
SCOTTISH LEAVING CERTIFICATE EXAMINATION

GAELIC

HIGHER GRADE—(FIRST PAPER (b))

AURAL COMPREHENSION TEST

Monday, 16th March—12.15 P.M. to 12.45 P.M.

This paper must not be seen by any candidate

INSTRUCTIONS TO THE TEACHER

1. Use the ten minutes preceding the beginning of the test to make yourself thoroughly familiar with the passage to be read.

2. When so instructed by the supervising officer, read to the candidates the "Instructions to Candidates" given below.

3. Then read the passage aloud to the candidates, speaking clearly and naturally, and taking not more than **four minutes** to the reading.

4. After this reading inform the candidates that they may now turn over the printed question papers, and that they will have three minutes in which to study the questions. Remind the candidates that they may make notes during this interval of three minutes, but only on the sheets provided for the answers. You yourself will not be allowed to see the questions which are to be answered by the candidates.

5. When so instructed by the supervising officer, read the passage a second time, in exactly the same manner as on the first occasion and taking the same amount of time.

6. Remind the candidates that the questions are to be answered in English.

[TURN OVER

INSTRUCTIONS TO CANDIDATES

1. Listen carefully to the following passage with a view to answering questions on its content.

2. The questions are to be answered in English.

3. You are on no account to touch the printed question paper or to do any writing until you are told to do so.

4. The procedure will be as follows :—

(i) The passage will be read **twice**, with an interval of three minutes between the readings.

(ii) After the first reading you will be allowed to turn over the printed question paper and you will have three minutes in which to study the questions.

(iii) After the second reading you will write your answers on the sheet provided for this purpose.

5. All writing during the first and second readings is **strictly forbidden.** Notes may be made during the interval between the readings, but only on the sheet provided for the answers.

6. You may not ask for the repetition of any word or phrase.

Passage to be read to the candidates (maximum time of reading—four minutes):—

An uair a thòisich an cogadh, am measg nan daoine eile a chaidh do 'n arm á Cille-sgumain, chaidh mac Eachainn MhicGilleathain ann. An déidh dha bhith greis anns an Fhraing chuireadh do 'n Eiphit e ; agus as an Eiphit chuircadh do Mhesopotamia e, far an robh e gus an do chrìochnaich an cogadh. Bha e fhéin agus scachd saighdearan Breatannach air am fàgail ann am baile beag, gus sùil a chumail air na h-Arabaich agus gus a bhith 'nan cluasan do 'n arm. Bha iad a' dol a mach 's a stigh am measg muinntir an àite ; uidh air n-uidh, dh' fhàs na saighdearan agus na h-Arabaich gu maith mór aig a chéile. Cha robh gin de na saighdearan a b' fheàrr leis na h-Arabaich na Niall MacGilleathain.

Bha aon teaghlach sònraichte ann ris an robh e anabarrach coibhneil is truacanta, teaghlach anns an robh làn an tighe de chloinn. Bha iad bochd, bochd ; an casa dubha cho caol ri cas spàine, agus gun ach an craicionn a' còmhdach an cnàmh. Bha barrachd bìdh air a chur a mach do na saighdearan na b' urrainn iad uisneachadh, is bhiodh Niall MacGilleathain a' gleidheadh gu cùramach gach còrr a bhiodh air fhàgail, agus 'ga thoirt do 'n chloinn ud; càise agus briosgaidean agus tarbh-fheòil air am measgadh anns an aon phoit. Mun d' fhàg na saighdearan Breatannach am baile bha fuil na cloinne cho làidir teth 's gum biodh iad a' réiseadh air feadh an fhàsaich mar gum faiceadh tu buaile ghamhna a bha air an geamhrachadh gu maith air an leigeil a mach air madainn ghrianach earraich.

An uair a bha Niall MacGilleathain a' tighinn dhachaidh chuir athair agus màthair na cloinne bocsa beag 'na làimh, ag ràdh ris : " Tha sinne bochd, ach bu mhaith leinn fhios a bhith agad gu bheil gaol againn air a' choigreach a bha coibhneil ris a' chloinn. Anns a' bhocsa so tha inneal-chiùil a bha aon uair ainmeil ; inneal-chiùil a tha anns an teaghlach againne o chionn dà mhìle bliadhna, ach chan eil duine beò anns an dùthaich an diugh as urrainn an inneal a chluich. Am bi an coigreach cho maith agus am bocsa so a ghabhail bhuainn, an dòchas gum mair a theaghlach dà mhìle bliadhna anns an tìr thall a tha iad a' sealbhachadh ? "

Thug Niall MacGilleathain taing dhaibh ; an sin bheannaich iad cach a chéile, iadsan a' beannachadh a' choigrich an ainm Allah agus a' cromadh an cinn, is esan 'gam beannachadh an ainm Athair ar Tighearna Iosa Crìosd. An uair a thàinig e dhachaidh thug e am bocsa d' a athair agus dh' innis e dha facal air an fhacal mar thubhairt an t-Arabach ris. Ach ged dh' fheuch Eachann MacGilleathain ris an inneal-chiùil a chur ri chéile a dh' fheuchainn an gabhadh ceòl a thoirt aisde, dh' fhairtlich e air gu buileach. Iomadh is iomadh uair chuireadh e seachad a' chuid a b' fheàrr de 'n latha a' corramheurachd nam bioran agus nan teudan a bha anns a' bhocsa, agus muinntir Chille-sgumain a' feitheamh ri bròg an a chuir iad thuige g' an càradh.

1959
SCOTTISH LEAVING CERTIFICATE EXAMINATION

GAELIC

HIGHER GRADE—(FIRST PAPER (b))

AURAL COMPREHENSION TEST

Monday, 16th March—12.15 P.M. to 12.45 P.M.

Answers are to be written on the sheet provided for the purpose, on which are also to be written any notes made between the readings.

QUESTIONS

	Marks
1. Where was Hector Maclean's son when the war ended? What were his duties?	2
2. Describe the family with whom he became friendly.	3
3. How did he show kindness to this family?	3
4. Show that the family benefited. Give the substance of the comparison made by the author.	3
5. On leaving to come home what gift did he receive? What benefit was this gift calculated to bestow?	2
6. Show that the gift turned out to be more of a hindrance than a help.	2
	15

(C64311)

1959
SCOTTISH LEAVING CERTIFICATE EXAMINATION

GAELIC

HIGHER GRADE—(SECOND PAPER)

Monday, 16th March—2.0 P.M. to 4.0 P.M.

N.B.—Begin the answer (or fair copy of an answer) to each question on a fresh page.

Marks will be deducted for bad spelling and bad punctuation, and for writing that is difficult to read.

The value attached to each question, or to each part of a question, is shown in brackets after the question.

[TURN OVER

SECTION I

1. Write, in Gaelic, an essay on any **one** of the following subjects :—

(*a*) Cruinneachadh sam bith aig an robh thu—mòd, féill, lùth-chleasan, cuirm, comanachadh.

(*b*) " Cha téid e, no i, gu bràth as mo chuimhne."

(*c*) Fìor obair latha.

(*d*) Goireasan-siubhail nan Eilean—bheil iad a' dol am feabhas ? (30)

2. Translate into Gaelic :—

One hot summer's day in Skye I watched a characteristic scene. The woman was hoeing potatoes, while her husband sat peacefully on a boulder, smoking his pipe and watching her at work. The skilled and pleasant jobs—ploughing, scything, wood-cutting, the tending of sheep—are in the hands of the men, while the dull, heavy, routine work is done by women. Hardly a man knows how to milk a cow : the making of hay and binding of sheaves is a woman's business : while poultry-keeping in all its branches is looked down upon as only fit for grandmothers. When the Laird took over the care of his fowls, and was seen walking down the steading in kilt and gumboots, scattering grain and calling " chook ! chook ! " followed by tribes of hens of every breed and colour, he must have caused the greatest scandal of the century. I once told Flora's brother that in England the women rarely milked, while the best poultry farms were managed and staffed by men ; but I do not think he believed me. (30)

SECTION II

Answer question (1) and any TWO of the others. The answers may be in Gaelic or in English.

(1) Select **four** representative poems from the work of Donnchadh Bàn **or** Iain MacCodrum **or** Rob Donn and discuss these poems with respect to content and style.

or

Discuss the predominance of descriptive poetry in Gaelic. (8)

(2) Assess the work of a Gaelic essayist of the 19th or 20th century. (6)

(3) Give a short account of the main causes of emigration from the Highlands and Islands during the eighteenth and nineteenth centuries. Mention the sources of your information. (6)

(4) Give the Gaelic form and the meaning of **six** of the following place names :—

Helmsdale, Nairn, Fort Augustus, Schiehallion, Kingussie, Loch Maree, Colintraive, Bowmore, Eriskay, Fortrose. (6)

(5) Write down **six** Gaelic proverbs containing references to one or more of the following :—

age, beauty, love, guile, the sea. (6)

1959
SCOTTISH LEAVING CERTIFICATE EXAMINATION

RUSSIAN

LOWER GRADE—(PAPER (a))

AURAL COMPREHENSION TEST

Thursday, 19th March—9.15 A.M. to 9.45 A.M.

This paper must not be seen by any candidate.

INSTRUCTIONS TO THE TEACHER

1. Use the ten minutes preceding the beginning of the test to make yourself thoroughly familiar with the passage to be read.

2. When so instructed by the supervising officer, read to the candidates the "Instructions to Candidates" given below.

3. Write on the blackboard (*a*) the title of the passage to be read which is "A trip to the Taiga"; (*b*) the following words, marking accents:—

тайга́: dense Siberian forest. лесни́к: forester.

4. Then read the passage aloud to the candidates, speaking clearly and naturally, and taking not more than **four minutes** to the reading.

5. After this reading inform the candidates that they may now turn over the printed question papers, and that they will have three minutes in which to study the questions. Remind the candidates that they may make notes during this interval of three minutes, but only on the sheets provided for the answers. You yourself will not be allowed to see the questions which are to be answered by the candidates.

6. When so instructed by the supervising officer, read the passage a second time, in exactly the same manner as on the first occasion and taking the same amount of time.

7. Remind the candidates that the questions are to be answered in English.

[TURN OVER

INSTRUCTIONS TO CANDIDATES

1. Listen carefully to the following passage with a view to answering questions on its content.

2. The questions are to be answered in English.

3. You are on no account to touch the printed question paper or to do any writing until you are told to do so.

4. The procedure will be as follows :—

   (i) The passage will be read **twice,** with an interval of three minutes between the readings.

   (ii) After the first reading you will be allowed to turn over the printed question paper and you will have three minutes in which to study the questions.

   (iii) After the second reading you will write your answers on the sheet provided for this purpose.

5. All writing during the first and second readings is **strictly forbidden.** Notes may be made during the interval between the readings, but only on the sheet provided for the answers.

6. You may not ask for the repetition of any word or phrase.

Passage to be read to the candidates. (Maximum time of reading—four minutes.)

Однажды я, как инженер, поехал на Дальний Восток. Я окончил дела и перед возвращением обратно решил заехать в тайгу к леснику. Лет пять назад я гостил у него и вместе с ним ходил на охоту. Никогда, нигде и ни с кем мне не было так интересно охотиться, как с ним в тайге.

К леснику надо было ехать от города почти двести километров. Его домик стоял в тайге, немного в стороне от дороги. Сажусь в автомобиль и еду.

Сначала дорога идет между озерами. Их окружают зеленые холмы. Трудно передать, как там красиво! Удивительная местность!

Но вот дорога прячется в густой, темный лес. Ничто не нарушает его тишины. Могучий старый лес! Немножко страшно! Кажется, ни за что не останешься здесь надолго один. Рассказывают, что есть места в чаще леса, где нельзя ни пройти, ни проехать.

Дорогу здесь проложили недавно, и в первое время звери никого не боялись, ни от кого не убегали. Местные жители рассказывали, что свободно гуляли зайцы, появлялись на дороге даже медведи.

Но теперь на дороге не было никаких зайцев и, тем более, никаких медведей. Навстречу мне мчались автомобили и мотоциклы. Из-за поворота неожиданно показалась группа велосипедистов. Раньше я никогда не видал здесь никого на велосипеде. Я стал смотреть налево. За поворотом лес уже не такой густой. Сейчас должен быть знакомый домик. . . . Через минуту на шум машины выбежит и залает собака. Нет! Не вижу никакой собаки, не слышу никакого лая . . . И вдруг . . . заводской гудок!

Лес неожиданно кончается. Я выезжаю на открытое место. Домика лесника нет. Вместо него передо мной большой завод, а дальше дома, асфальтированные улицы.

Мне показалось, что я сплю и вижу сон. Но это не сон. В тайге вырос молодой советский город.

(C64640)

1959
SCOTTISH LEAVING CERTIFICATE EXAMINATION

RUSSIAN

LOWER GRADE—(PAPER (a))

AURAL COMPREHENSION TEST

Thursday, 19th March—9.15 A.M. to 9.45 A.M.

Answers are to be written on the sheet provided for the purpose, on which are also to be written any notes made between the readings.

QUESTIONS

Marks

1. In what capacity was the writer visiting the Far East ?
At what stage in his visit did he decide to go and see the forester ?
When had he previously visited the forester and how had he occupied himself during the visit ? **2**

2. How far away from the town was the forester's house ?
Describe briefly the scenery that the road passed through before reaching the forest.
Describe briefly the features of the forest. What effect did it produce on the traveller ? **4**

3. How had animals reacted to users of the road when it was first opened ?
What animals does the writer mention, and who had reported about them ?
Did the writer see these animals on the present trip ? **3**

4. What forms of transport did the writer meet on the road ?
Which form had he not seen there before ? **1½**

5. What did the writer expect to see and hear on the left after a bend as he approached his destination ?
What did he hear and see instead ? **3½**

6. What did this experience seem like to the writer ? **1**

15

(C64641)

R (Lower (b))

1959
SCOTTISH LEAVING CERTIFICATE EXAMINATION

RUSSIAN

LOWER GRADE—(PAPER (b))

Thursday, 19th March—10.0 A.M. to 12.15 P.M.

N.B.—Begin the answer (or fair copy of an answer) to each question on a fresh page.

Marks will be deducted for bad spelling and bad punctuation, and for writing that is difficult to read.

The value attached to each question is shown in brackets after the question.

---

1. Translate carefully, with due regard to English form and expression :—

Шел снег. Ветер нес мокрые хлопья прямо навстречу Вале, и сквозь снег в темноте она с трудом различала номера домов.

Какой-то человек в тулупе с поднятым воротником спросил :

— Кого ищешь, милая ?

— Дяденька, мне дом пятьдесят два, не знаете ли ?

— Ступай прямо. Вон там за аптекой. Да смотри, не упади, — нынче скользко.

Кое-как добралась Валя до ворот дома номер пятьдесят два и позвонила. Появился мальчик.

— Тут живут Степановы ? — спросила Валя.

— Мы — Степановы. А что надо ?

— Вам письмо.

Валя протянула письмо. Мальчик так и выхватил его у нее из рук.

— Это кто привез ? — спросил он.

— По почте получили.

— А ты почтальон, что ли ?

Нет, — сказала Валя. — Нам ваше письмо по ошибке в ящик бросили. У нас адрес такой же, как у вас, только мы живем на Большой Заречной, а вы на Малой. Вот я и принесла письмо.

[TURN OVER

Валя повернулась и зашагала домой.

— Спасибо! — крикнул мальчик ей вслед.

Прошел месяц, другой, третий. Валя уже думать забыла про чужое письмо. Но вот однажды она достала почту и побежала к папе.

— Папа, смотри какой смешной адрес на конверте. Все есть — и улица и номер, а фамилии нет.

Папа взял письмо, распечатал конверт, вынул листок и прочел:

„Дорогая незнакомая девочка! Зимой ты принесла на Малую Заречную мое письмо с фронта. Ты и не знаешь, как ты этим помогла и мне и моим родным. Если бы мое письмо затерялось, мы все пережили бы много тревог* и огорчений. Большое тебе спасибо. Уверен, что ты вырастешь хорошей гражданкой.

Уважающий тебя
Гвардии старший лейтенант
М. Степанов".

(30)

* Anxiety

2. Read the passage below, then answer the questions which follow it.

N.B.—The passage is NOT to be translated.

Вообще о проделках тигров в Уссурийском крае распространяется немало рассказов, но я сообщу здесь только самые замечательные.

В темную зимнюю ночь тигр пришел в пост Раздольный и, видя, что конюшня, в которой помещались лошади, заперта, не долго думая, вскочил на крышу, и через небольшое окно в крыше забрался к лошадям и тотчас же задавил двух из них. Остальные лошади, испугавшись неожиданного гостя, подняли страшный шум, так что солдаты, спавшие в соседней казарме, догадались, в чем дело, и прибежали на помощь.

В то же самое время происходит новый переполох в свинарнике, и, прежде чем туда прибежали люди, этот же самый тигр успел задавить трех свиней и скрыться совершенно благополучно.

Но вот еще исключительный случай.

Однажды ночью тигру удалось забраться во двор нашего пограничного поста, перепрыгнув через забор по крайней мере в две сажени[1] вышины. В то время во дворе находились только корова с теленком. Хищник[2] тотчас же схватил теленка.

Предсмертные стоны[3] несчастного теленка заставили мать забыть всякий страх, и — представьте — корова бросается на тигра и яростно бодает[4] его в бок своими острыми рогами. В то же самое время люди, разбуженные шумом, стреляют. Тигр, почувствовав опасность, бросает теленка и хочет спастись бегством через забор, но делает неудачный прыжок. Между тем, корова, ободренная[5] своей победы, вновь бросается на зверя и снова его бодает. Вслед за тем раздается еще выстрел.

Перепуганный тигр, видя, что ему никак не удается скрыться, совсем теряется и бегает, как сумасшедший,[6] по всему двору из одного конца в другой, преследуемый коровой.

Наконец, зверь делает еще один отчаянный прыжок и с трудом перескакивает через забор. Храбрая корова возвращается тогда к своему детенышу, но находит его уже мертвым.

Рассказ этот я слышал от очевидцев этого необыкновенного боя, показывавших мне даже и самую корову, по всей справедливости „храбрую из храбрых",

(1) сажень : семь английских футов.
(2) хищник : дикий зверь, который съедает других животных.
(3) стон : groan.
(4) бодать : бить рогами.
(5) ободренный : encouraged.
(6) сумасшедший : mad.

QUESTIONS

Marks

A. **Answer in English :—**

(1) Which of the stories about the misdeeds of tigers in the Ussuriysky district is the writer telling ? When did a tiger attack the post at Razdolny ? What part of the premises did it penetrate ? How did it get in ? Why did it need to get in this way ? **4**

(2) What loss of life resulted from the tiger's attack at Razdolny ? Who came to render aid ? Where were the rescuers at the time of the attack and what were they doing ? How did they know there was trouble ? **4**

Marks

(3) When did the alarm in the piggeries occur? Who was the culprit this time? What misfortune happened here? Why was the culprit not hindered and what happened to him? 3

(4) How did a tiger get into the frontier post? What was remarkable about this? Where in the post did the fight with a cow take place? What animal did the tiger attack first and what happened to it? What other animals were there? $3\frac{1}{2}$

(5) How did the cow open her attack on the tiger? What had the men been doing when the alarm occurred and how did they help the cow? How did the cow react to the tiger's bewilderment? Describe the last stage of the incident between the cow and the tiger. What happened to the tiger in the end? $5\frac{1}{2}$

(6) From whom did the writer hear this story? What did they show him? 2

(7) What words, other than тигр, are used to denote the tiger? Explain them by referring to their meaning. 2

(8) What tenses are used to describe these incidents? Suggest why the writer passes from one tense to another. 2

B. **Answer in Russian :—**

(9) Что такое пограничный пост? 2

(10) Почему тигр бросил теленка? 2

30

3. Write in Russian a continuous story based on the following summary.

N.B.—Your essay should be about 200 words, i.e. about four-fifths the length of the translation of question 1. Write in the PAST tense and be careful to use correct aspects of verbs.

Мальчик (девушка) проводит каникулы у друзей в деревне — едет на день в близкий город — там много интересного — забывает о времени — опаздывает на поезд (автобус) — приходится вернуться пешком — извиняется за позднее возвращение.

(25)

1959
SCOTTISH LEAVING CERTIFICATE EXAMINATION

RUSSIAN

HIGHER GRADE—(FIRST PAPER)

Thursday, 19th March—10.0 A.M. to 12.15 P.M.

N.B.—Begin the answer (or fair copy of an answer) to each question on a fresh page.
Marks will be deducted for bad spelling and bad punctuation, and for writing that is difficult to read.
The value attached to each question is shown in brackets after the question.

[TURN OVER

1. Translate carefully, with due attention to English form and expression:—

(*a*) Я помню трамвай моего детства — короткий вагончик с открытыми площадками. Он тащил за собой один прицепной вагон. Потом появились трамваи с закрытыми площадками. Эти были длиннее: вместо восьми окон — десять, а потом и двенадцать. Моторный вагон с двенадцатью окнами имел мощные двигатели, он тянул целых два прицепа. По улицам Москвы побежали трехвагонные трамваи — целые поезда.

А однажды появился вагон трамвая с автоматически закрывающимися дверями и мягкими сиденьями. Было это, кажется, в тысяча девятьсот тридцать втором году. Мы с товарищем решили прокатиться в новом вагоне. Чтобы занять сидячие места, мы отправились на конечную остановку. Шли пешком, потому что денег на проезд в оба конца у нас не было. Пришлось шагать целых полтора часа, и за это время новый трамвай несколько раз обгонял нас и возвращался обратно. Наконец мы пришли, дождались на остановке нового вагона и с торжеством уселись. Трамвай помчался, звеня и рассыпая искры. Мы мягко покачивались на сиденьях.

В каких-нибудь двадцать минут доехали до своей остановки. Все кончено, пора вылезать!

— А все-таки хорошо! — сказал мой товарищ.

— Что хорошо — сиденья мягкие? — спросил я.

— Нет, то есть сиденья тоже, но главное — скорость. Ведь мы полтора часа шли, а обратно доехали за двадцать минут! Выходит, на трамвае почти в пять раз скорее, чем пешком.

— Верно! — сказал я. — Мы просто привыкли всюду ездить, поэтому и не замечаем скорости. А вот до завода, где работает мой отец, трамвай идет почти час. Да еще обратно столько же. Значит, если бы трамвая не было, отец ходил бы пешком больше восьми часов в день. А таких, как он, много в нашем городе!

(32)

(*b*) Первые часы в Нью-Йорке, — прогулка по ночному городу, а затем возвращение в гостиницу, — навсегда сохранятся в памяти, словно какое-то событие.

А ведь, в сущности, ничего особенного не произошло. Вернувшись в гостиницу, мы вошли в лифт, и он помчался кверху. Лифт останавливался, и негр, открывая дверцу, кричал: "Вверх!",

пассажиры называли номер своего этажа. Вошла женщина. Тогда все мужчины сняли шляпы и дальше ехали без шляп. Мы сделали то же самое. Это был первый американский обычай, с которым мы познакомились. Через несколько дней мы поднимались в лифте к нашему издателю. Вошла женщина, и мы с поспешностью старых опытных нью-йоркцев сняли шляпы. Однако остальные мужчины не последовали нашему примеру и даже посмотрели на нас с любопытством. Оказалось, что шляпы нужно снимать только в частных и гостиничных лифтах. В тех зданиях, где люди делают "бизнес", можно оставаться в шляпах.

На двадцать седьмом этаже мы вышли из лифта и по узкому коридору направились к своему номеру. Огромные второклассные нью-йоркские гостиницы в центре города строятся чрезвычайно экономно, — коридоры узкие, комнаты хотя и дорогие, но маленькие, потолки стандартной высоты, то есть невысокие. Однако, эти маленькие комнаты очень чисты и комфортабельны.

(23)

[TURN OVER

2. Read the passage below, then answer the questions which follow it.

N.B.—The passage is NOT to be translated.

С парохода спустили лодку у берегов Новой Гвинеи, и трое человек прыгнули в нее. Капитан парохода смотрел на них.

— Николай Николаевич, — крикнул он, — где ваше ружье? — Я же говорил вам, чтобы вы взяли оружие!

Человек в белой шляпе, один из троих, поднял голову; он улыбался.

— Не бойтесь, капитан. Ничего со мной не случится. Есть шарфы, есть платки, есть разные подарки. Зачем мне ружье? Я люблю разговаривать без пороха.

Капитан покачал головой и тихо пробормотал:

— Только один Маклай и способен на это. К дикарям — и вот как: без ружья, без револьвера . . .

Лодка быстро шла к берегу. Все ближе и ближе становились желтый песок берега, темная масса густой зелени, высокие деревья. С прибережных скал свешивались прямо в воду сильные ветки вьющихся растений. Ветер доносил сладкий аромат незнакомых цветов и трав. Пестрые птицы и бабочки летали в густой листве деревьев.

Лодка пристала к берегу. Маклай перепрыгнул через борт. Узенькая тропинка начиналась прямо от берега.

— Не ходите за мной. Я скоро вернусь, — сказал Маклай своим спутникам и быстро зашагал вверх по лесной тропинке.

Узенькая тропинка привела его к широкой площадке. Кругом стояли хижины. Низкие крыши, сделанные из пальмовых листьев, спускались почти до земли. Двери были открыты. Окон не было. Свет проникал в жилище только через дверь.

Войти в хижину Маклай не решался. Кругом, казалось, не было ни души. Но люди только что были здесь. Недопитый кокосовый орех, наполовину полный "молоком", еще валялся на земле. Брошенное в кусты весло было еще мокро. Разрезанный кусок дерева лежал у входа в хижину. Здесь кто-то только что работал над ним.

Маклай стоял, прислушиваясь к пению птиц, звону насекомых, шуму быстрого горного ручья. Шорох сзади вдруг привлек его внимание. Он быстро обернулся и увидел человека. Человек замер на месте, потом вздрогнул и бросился бежать.

— Стой ! — крикнул Маклай и кинулся за ним. — Не бойся. Я не сделаю тебе ничего плохого. Я друг !

Бегущий человек как будто понял его. Он остановился и посмотрел на Маклая. Николай Николаевич медленно подошел к папуасу и так же медленно, чтобы не испугать его лишним движением, вынул из кармана и протянул ему красный платок. Папуас осторожно взял платок и внимательно осмотрел, и вдруг, засмеявшись, ловко повязал его на свою голову. Должно быть, он не находил ничего страшного в этом странном белом человеке. И оба улыбались друг другу.

QUESTIONS

A.—**Answer in English :—** *Marks*

(1) How many men did Maclay take with him in the boat ? Where did the boat start from ? Where did he leave the men ? What did he promise to do ? **2**

(2) What could the men (*a*) see and (*b*) smell from the boat ? **6**

(3) Where did the path begin and where did it lead ? **1**

(4) Describe the huts Maclay saw. **3**

(5) How did Maclay know that people had been there recently ? **4½**

(6) What sounds could Maclay hear as he stood near the huts ? What sound especially attracted his attention ? **3**

(7) How did the Papuan react when he caught sight of Maclay ? **1½**

(8) In what circumstances did Maclay reply "Я люблю разговаривать без пороха" ?
What did he mean by this and how did he begin to put his principle into practice ? **5**

B.—**Answer in Russian :—**

(9) Почему папуас взял платок осторожно и внимательно осмотрел его, прежде чем повязать на голову ? **2**

(10) Почему Маклай и папуас улыбались друг другу ? **2**

30

1959
SCOTTISH LEAVING CERTIFICATE EXAMINATION

RUSSIAN

HIGHER GRADE—(SECOND PAPER (a))

AURAL COMPREHENSION TEST

Thursday, 19th March—1.30 P.M. to 2.0 P.M.

This paper must not be seen by any candidate.

INSTRUCTIONS TO THE TEACHER

1. Use the ten minutes preceding the beginning of the test to make yourself thoroughly familiar with the passage to be read.

2. When so instructed by the supervising officer, read to the candidates the "Instructions to Candidates" given below.

3. Write on the blackboard :—

(*a*) the title of the passage to be read, which is, "A cinematograph expedition to the Kirghiz."

(*b*) the following words, marking accents :

Кирги́зия : Kirghiz (Soviet republic in Central Asia).

перева́л : mountain pass.

4. Then read the passage aloud to the candidates, speaking clearly and naturally, and taking not more than **four minutes** to the reading.

5. After this reading inform the candidates that they may now turn over the printed question papers, and that they will have three minutes in which to study the questions. Remind the candidates that they may make notes during this interval of three minutes, but only on the sheets provided for the answers. You yourself will not be allowed to see the questions which are to be answered by the candidates.

6. When so instructed by the supervising officer, read the passage a second time, in exactly the same manner as on the first occasion and taking the same amount of time.

7. Remind the candidates that the questions are to be answered in English.

[TURN OVER

INSTRUCTIONS TO CANDIDATES

1. Listen carefully to the following passage with a view to answering questions on its content.

2. The questions are to be answered in English.

3. You are on no account to touch the printed question paper or to do any writing until you are told to do so.

4. The procedure will be as follows :—

(i) The passage will be read **twice,** with an interval of three minutes between the readings.

(ii) After the first reading you will be allowed to turn over the printed question paper and you will have three minutes in which to study the questions.

(iii) After the second reading you will write your answers on the sheet provided for this purpose.

5. All writing during the first and second readings is **strictly forbidden.** Notes may be made during the interval between the readings, but only on the sheet provided for the answers.

6. You may not ask for the repetition of any word or phrase.

Passage to be read to the candidates. (Maximum time of reading—four minutes.)

A Cinematograph Expedition to the Kirghiz.

Наша экспедиция вылетела из Ленинграда в конце мая. Мы прилетели в столицу Киргизии, и оттуда через два дня отправились в горы. Сначала мы ехали на автомобилях, потом пересели на лошадей. Я никогда не забуду путешествия по долине ! Как там красиво ! Огромные ели покрывают северные склоны гор и образуют густые леса. Пройти или проехать через эти леса невозможно, так они густы.

Зеленые луга покрывают южные склоны. Трава там высокая, густая. На лугах пасутся лошади, коровы и овцы. Летом пастухи приводят табуны лошадей и стада коров и овец в горы, а зимой уводят их вниз, в долину.

Через несколько дней мы поднялись на перевал. Какие чудные виды снимали мы здесь в ясные дни !

Мы провели в горах несколько дней среди пастухов. Однажды сюда приехали оперные артисты. Еще до заката солнца пастухи и их семьи собрались на склоне горы послушать артистов. Приезд артистов из столицы Киргизии — большое событие для жителей гор. Мы тоже с удовольствием слушали и смотрели сцены из оперы. Интересен был национальный сюжет оперы, хорошо звучали в горах киргизские мелодии.

Вскоре мы спустились с перевала, перешли через реку и стали подниматься на другой перевал. Наша экспедиция с трудом проходила по дорожке: на склоне был лед. Наконец, мы поднялись на другой перевал.

На востоке видны были высокие горные хребты. Вдали блестели на солнце горные реки. Вокруг было тихо. Но вот пролетел маленький самолет.

— Это самолет врача, — сказали мои товарищи. — Врачи здесь часто посещают горные деревни на самолетах.

Мы провели в горах целый месяц.

Однажды мы перенесли наши киноаппараты через ледник и вышли на дорожку. Среди льда и снега был красивый зеленый луг. На лугу спокойно паслись дикие козы: они не встречали здесь человека и сначала не испугались. Когда же начал работать наш киноаппарат, козы убежали.

Быстро пробежало время в горах. Наша экспедиция привезла домой прекрасные горные виды для кинофильма.

Через год мы опять поедем в горы и привезем новый материал. Это очень интересное путешествие.

(C64644)

1959
SCOTTISH LEAVING CERTIFICATE EXAMINATION

RUSSIAN

HIGHER GRADE—(SECOND PAPER (a))

AURAL COMPREHENSION TEST

Thursday, 19th March—1.30 P.M. to 2.0 P.M.

Answers are to be written on the sheet provided for the purpose, on which are also to be written any notes made between the readings.

QUESTIONS

Marks

1. When did the expedition leave Leningrad ? How long did it spend in the Kirghiz capital ? What means of transport were used to travel from the Kirghiz capital to the mountains ? **2**

2. What did the travellers see on the northern slopes of the mountains ? What was growing on the southern slopes and what animals were on the southern slopes ? **4**

3. In whose company did the expedition spend several days ? Who else arrived during this time and what did they do in the mountains ? What part did members of the expedition take in this activity ? **2**

4. What was there between the first and second mountain pass ? Why was the ascent of the second pass difficult ? **1**

5. Whose was the aeroplane that the writer saw ? How did he know ? Where did these planes often visit ? **1½**

6. How long did the company spend in the mountains ? Where did they see the wild goats ? How did the goats react to the presence of the cinematographers ? **3**

7. What did the expedition bring back with it ? When do they hope to return to the mountains ? **1½**

15

(C64645)

1959
SCOTTISH LEAVING CERTIFICATE EXAMINATION

RUSSIAN

HIGHER GRADE—(SECOND PAPER (b))

Thursday, 19th March—2.15 P.M. to 4 P.M.

N.B.—Begin the answer (or fair copy of an answer) to each question on a fresh page.
Marks will be deducted for writing that is difficult to read.
The value attached to each question is shown in brackets after the question.

1. Translate into Russian :—

The train stopped at the station. Grisha Kozlov got out with his luggage on to the platform. From the station he went to the main square of the town, which was quite near, and began to wait, hoping that he would see a car from the collective farm[1] " Red Star." Grisha had come to visit his parents who lived there, but as he had not written them, nobody was at the station to meet him. The farm was situated ten kilometres from the station, and with his heavy luggage it was impossible to go on foot. Besides, it was already half past seven in the evening and was getting dark. Suddenly he heard steps behind him and a familiar voice. He turned round and saw his former school-friend Ivan.

" Hullo, Ivan ! " joyfully exclaimed Grisha.

" What are you doing here ? " asked Ivan. " Are you going to your parents ? "

" Yes," said Grisha, " I have got ten days' leave and I decided to visit my father and mother."

" I came here with the lorry[2] to collect goods for the farm. Everything is ready and I'm just going back, so put your things on the lorry, sit next to me and I'll drive you home."

Of course Grisha was very pleased to take advantage of his friend's offer. Soon the lorry drove out of the town on the road to the village.

[1] collective farm : колхоз. [2] lorry : грузовик. **(50)**

2. Write an essay on **one** of the following themes :

N.B.—Your essay should be from one to one and a half times the length of the translation of question 1.

(*a*) Времена года.

(*b*) „Что я видел в Шотландии." (Письмо русского студента, который посещает Великобританию.)

(*c*) Расскажите какое-нибудь воспоминание из детства. **(25)**

(C64646)

1959
SCOTTISH LEAVING CERTIFICATE EXAMINATION

ITALIAN

LOWER GRADE—(PAPER (a))

AURAL COMPREHENSION TEST

Thursday, 12th March—9.15 A.M. to 9.45 A.M.

This paper must not be seen by any candidate.

INSTRUCTIONS TO THE TEACHER

1. Use the ten minutes preceding the beginning of the test to make yourself thoroughly familiar with the passage to be read.

2. (*a*) When so instructed by the supervising officer, read to the candidates the "Instructions to Candidates" given below.

(*b*) Write on the blackboard the title of the passage to be read, which is "The Theft of a Wallet."

3. Then read the passage aloud to the candidates speaking clearly and naturally, and taking not more than **four minutes** to the reading.

4. After this reading inform the candidates that they may now turn over the printed question papers, and that they will have three minutes in which to study the questions. Remind the candidates that they may make notes during this interval of three minutes, but only on the sheets provided for the answers. You yourself will not be allowed to see the questions which are to be answered by the candidates.

5. When so instructed by the supervising officer, read the passage a second time, in exactly the same manner as on the first occasion and taking the same amount of time.

6. Remind the candidates that the questions are to be answered in English.

[TURN OVER

INSTRUCTIONS TO CANDIDATES

1. Listen earefully to the following passage with a view to answering questions on its eontent.

2. The questions are to be answered in English.

3. You are on no aceount to toueh the printed question paper or to do any writing until you are told to do so.

4. The procedure will be as follows :—

(i) The passage will be read **twice,** with an interval of three minutes between the readings.

(ii) After the first reading you will be allowed to turn over the printed question paper, and you will have three minutes in which to study the questions.

(iii) After the seeond reading you will write your answers on the sheet provided for this purpose.

5. All writing during the first and seeond readings is **strictly forbidden.** Notes may be made during the interval between the readings, but only on the sheet provided for the answers.

6. You may not ask for the repetition of any word or phrase.

7. I am going to write on the blaekboard the title of the passage, which is " The Theft of a Wallet."

Passage to be read to the candidates :—(Maximum time of reading—four minutes).

Un giorno mi trovavo in Aneona. Eravamo ai tempi dell'altra guerra. Ero uffieiale d'artiglieria, in lieenza. Di passaggio per Aneona : di ritorno dal fronte, m'ero fermato in quella eittà in attesa d'un'auto che mi rieonducesse alla easa dei miei genitori. Intanto ero andato, a mezzogiorno, a mangiare in un ristorante. Avevo trovato, lí dentro, un pieno d'uffieiali. Ero malvestito perché tornavo dal fronte. Ma essi erano tutti ben vestiti e bene agghindati. Mi ritrovai, framezzo, un poco sconcertato. Allora, dopo il primo smarrimento, m'ero messo a mangiare e avevo terminato in fretta in fretta.

Il eameriere, impalato dinanzi a me, attendeva, ormai, ehe saldassi il conto. Quand'eeeo entrare, nella stessa nostra sala da pranzo, un colonnello. Tutti si levano in piedi. Militare come ero, faeeio il rigido saluto. In questo frattempo, in questa pausa, probabilmente fu il cameriere ehe tolse il portafogli, già da me cavato fuori di tasea e messo sulla tavola per toglierne un biglietto e eon esso pagare. Fatto è che quando mi rimisi a sedere, il portafogli non e'era piú.

Cereai eon mani eonvulse, nelle mie tasehe, in quelle interne della giubba, in quelle dei pantaloni. Gettai ocehiate di qua di là, sotto il tavolo e sopra le seggiole. Intanto il cameriere faeeva lo gnorri. Ero rosso in viso e lo pregai di aecompagnarmi dal padrone dell'Albergo. Egli mi seguí. Ma mi seguí ad alcuni passi di distanza ; e, forse, eonsegnò il portafogli ad un altro eameriere. Fatto è ehe il padrone dell'albergo non si mostrò affatto sorpreso del furto del portafogli. Soltanto si mostrò seeeato dell'aeeaduto e mi pregò di non far ehiasso. In quanto al eonto da saldare, mi domandò se non avessi altro denaro in tasea. Risposi di no. Non avevo eon me neppure piú uno spieeiolo. Allora, il padrone mi pregò di lasciargli l'anello o l'orologio.

1959
SCOTTISH LEAVING CERTIFICATE EXAMINATION

ITALIAN

LOWER GRADE—(PAPER (a))

AURAL COMPREHENSION TEST

Thursday, 12th March—9.15 A.M. to 9.45 A.M.

Answers are to be written on the sheet provided for the purpose, on which are also to be written any notes made between the readings.

QUESTIONS

	Marks
1. What was the author's occupation at the period of the incident he describes ?	1
2. How did he come to be in the restaurant ?	2
3. Why did he feel embarrassed in the restaurant ? What did he do as a result ?	2
4. Who does he think stole his wallet ? How did the thief get his opportunity ?	3
5. What did the author do to begin with when he missed his wallet ?	3
6. What steps did the author take to recover the stolen wallet ? How does he think the thief disposed of it ?	2
7. How did the proprietor react to the news of the theft ?	1
8. What did the proprietor suggest the author should do ?	1
	15

(C64648)

1959
SCOTTISH LEAVING CERTIFICATE EXAMINATION

ITALIAN

LOWER GRADE—(PAPER (b))

Thursday, 12th March—10.0 A.M. to 12.15 P.M.

N.B.—Begin the answer (or fair copy of an answer) to each question on a fresh page.

Marks will be deducted for bad spelling and bad punctuation, and for writing that is difficult to read.

The value attached to each question is shown in brackets after the question.

---

1. Translate carefully, with due attention to English form and expression :—

Una sera tutta la famiglia era raccolta nella sala da pranzo, e Camilla, la domestica, seduta in un canto. Era notte avanzata ; chi leggeva, chi scriveva, nessuno parlava ; non si sentiva fiatare. Sul terrazzino c'eran dei vasi di fiori ; e solo il rumore delle foglie scosse dal vento, e i rintocchi lontani di una campana turbavano quel silenzio. A un tratto s'udí in una stanza accanto un colpo forte come di cosa pesante caduta dall'alto, e insieme un acutissimo grido. Quasi nello stesso punto un altro grido, piú acuto del primo, proruppe dalla bocca di Camilla. La signora, il marito, i figliuoli, senza badare a lei, corsero nell'altra stanza. " Non è nulla ! " gridò dopo un momento la madre. Era la bambina che, cercando al buio la corda del campanello per fare uno scherzo, aveva urtato colla mano in un grosso quadro appeso al muro, e il quadro le era caduto sui piedi. Tornarono subito nella sala da pranzo e là videro Camilla distesa in terra. L'alzarono, le sanguinava il viso ; nel punto stesso che aveva gettato il grido, era svenuta, e nel cadere aveva dato della fronte contro una seggiola. La portarono a letto, rinvenne ; ma le si manifestò subito una febbre cosí violenta, che ne furon tutti spaventati. Quando poté parlare, domandò che cosa fosse stato quel colpo e quel grido ; glielo dissero ; dapprima pareva che non volesse credere. Cercarono di consolarla. " Che c'è da piangere ? ", le domandò la bambina. Ed essa piangendo piú forte rispose : " Non lo so ! "

(30)

[TURN OVER

2. Read the passage below, then answer the questions which follow it.

N.B. The passage is NOT to be translated.

Dovevo seguire un corso di perfezionamento in una grande città straniera, e mia madre mi raccomandò a una signora che aveva conosciuto durante un soggiorno di costei in Italia. Fui bene accolto ; la signora mi considerò un poco (m'aveva conosciuto giovinetto, ma io non la ricordavo) e mi propose di tenermi a pensione in casa sua. Costei era una vedova ; viveva con una governante e la vecchia madre. Occupai la stanzetta che mi aveva assegnato, e come mi accadeva allora che ero curioso di tutto, mi preparai subito per uscire. La signora mi accompagnò sulla porta e mi disse : " Spero che profitterete per visitare subito i nostri musei ".

" Vorrei vedere piuttosto la città. Sempre, quando mi trovo in una città sconosciuta, mi piace di perdermi per le strade e di percorrerle a piedi senza sapere dove portano ".

" Voi dunque non v'interessate ai nostri musei ? "

" Avrò tempo per vederli ".

Era il principio dell'autunno, e la stagione era molto piú avanzata che da noi. Il sole girava sull'orizzonte come se non sapesse dove scendere. Si doveva capire che ero straniero, perche i passanti mi guardavano levando appena gli occhi, come se di là da me, divenuto trasparente, scorgessero uno strano paese. In questa città si vedeva un grandissimo numero di merci e di bellissimi oggetti, come succede nelle città che hanno poco sole ; perciò voi trovate nelle vetrine e dappertutto i colori artificiali dei paesi senza sole, ciò che dà lo stesso una certa allegria. Tornai a casa soddisfatto e pieno di buoni pensieri per questa città straniera. Sapevo già che mi ci sarei trovato bene, e mi piaceva tutto, anche la bandierina che mettevano fuori come insegna i macellai, con la scritta " Oggi carne fresca ". A tavola parlai di queste cose con la signora, e raccontai un'avventura della mia giornata : in uno spaccio di tabacchi, dove il vecchio negoziante aveva disposto qualche centinaio di sigarette, dritte in fila su un piano inclinato presso il banco, io avevo con moto distratto del gomito buttato giú ogni cosa ; il vecchio s'era irritato, e quando cercai di riordinare quel diligente lavoro, si spazientí del tutto e mi cacciò dal negozio.

" Questo dipende dai movimenti impulsivi e incontrollati che fanno gl'italiani ", mi disse la signora.

Mi parve che ella volesse infliggermi una lezione. Tacqui tutto il tempo del pranzo ; dovevo imparare a muovermi meno impulsivamente in modo da non urtare nessuno e da non rovesciare nulla.

QUESTIONS

A. **Answer in English :—** *Marks*

(1) For what purpose did the author go abroad ? With whom did he stay ? What contacts had this person previously had with the author and his family ? Who else was living in the house ? **3½**

(2) How did the lady suggest the author should spend his first day ? What did he prefer to do and how did he propose doing it ? **2**

(3) What time of the year was it, and what indications are there that the country the author was visiting was further north than Italy ? **2**

(4) What features of the town particularly caught his attention ? How does he account for one of these features and how does he use this explanation to underline that this was a northern country ? **5½**

(5) What did the author imagine the passers-by saw when they looked at him ? Why was this so ? **2**

(6) Describe his frame of mind when he returned to his lodgings. **1½**

(7) What accident befell him in the tobacconist's ? How did the latter react ? How did the author try to improve matters and with what result ? **4**

(8) (*a*) What was the lady's comment on the incident ? What did it reveal about her attitude towards Italians in general ?

(*b*) How did the author interpret this comment ? How did it affect his subsequent behaviour ? **4**

B. **Answer in Italian :—**

(9) Spiegate la frase " tenere qualcuno a pensione " (lines 4, 5). **2**

(10) Che cosa fa una governante ? (line 5). **1½**

(11) " Cercai di riordinare il diligente lavoro " (lines 29, 30). A che si riferiscono le parole " diligente lavoro " ? **2**

30

3. Write, in Italian, a continuous story based on the following summary.

Your story must be written in the past tense and should be approximately 200 words in length (i.e. about four-fifths the length of the translation of question 1).

Pietro e Franco vanno in barca ad esplorare un'isola inabitata—vi trovano un vecchio castello rovinato—la sera la barca non c'è piú—viene il padre di Franco a cercare i ragazzi.

(25)

N

1

si
a
ar
e
al
sc
co
no
da
do
in
di
qu
la
a
qu
fra

"

1959

SCOTTISH LEAVING CERTIFICATE EXAMINATION

ITALIAN

HIGHER GRADE—(FIRST PAPER)

Thursday, 12th March—10.0 A.M. to 12.15 P.M.

N.B.—Begin the answer (or fair copy of an answer) to each question on a fresh page.

Marks will be deducted for bad spelling and bad punctuation, and for writing that is difficult to read.

The value attached to each question is shown in brackets after the question.

1. Translate carefully, with due attention to English form and expression :—

(*a*) Tra coloro che presero posto nel tram delle undici e mezza, era un giovane signore, circa sulla trentina, nettamente diverso per tipo, portamento e accuratezza di vestiti, da tutti gli altri. Bruno di capelli, con le scure pupille animate da quell'irrequietezza fervida che è propria dei nati nei paesi del sole e da quel puntino di sicurezza di sé stesso che è dono di una vita attiva e serena ; alto, forte, vivido, chiuso in una sobria pelliccia, era in pieno contrasto con lo scialbore,(1) la tranquillità, la piú che modestia d'abiti di tutti quegli slavi(2) corrosi dalla sventura, suoi occasionali compagni di tragitto. S'era fatto subito notare, perché, di fronte ai rabbuffi ringhiosi del bigliettaio passivamente subíti da tutti gli altri, egli s'era invece fermato bruscamente di fronte a lui, imponendogli d'essere piú gentile, e con tale tono autoritario, che l'altro, da buon tedesco in presenza della forza, non aveva fatto altro che fissarlo con uno sguardo misto di sbalordimento e d'odio, senza ribattere nulla. Egli s'era espresso in inglese—quasi tutti comprendono l'inglese a Berlino—ma era evidente non essere questa la sua lingua. Cosí che, quando andò a sedersi, una vecchia signora in lutto, a cui capitò vicino, gli disse a mezza voce, in francese : " Benissimo, signore, quel selvaggio meritava da un pezzo che qualcuno gli desse una lezione. Lei è francese ? Ho abitato per tanto tempo a Parigi . . . "

" Non sono affatto francese, signora," egli interruppe tranquillamente. " Italiano."

(1) scialbore = drabness.
(2) slavi = Slavs. **(30)**

(*b*) Quella mattina, dopo aver fatto la spesa al mercatino rionale (la spesa mi piace farla io : conosco i prezzi, so quello che voglio, mi piace contrattare e discutere, voglio sapere da quale bestia mi viene la bistecca, da quale cesta la mela), ero uscito di nuovo per comprare un metro e mezzo di frangia da cucire alla tenda, in sala da pranzo. Tornai a casa che erano le undici e venti, entrai in sala da pranzo per confrontare il colore della frangia con quello della tenda e subito vidi sulla tavola il calamaio, la penna e una lettera. A dire la verità, mi colpí soprattutto una macchia d'inchiostro, sul tappeto della tavola. Annoiato, levai il calamaio, la penna e la lettera, presi il tappeto, andai in cucina e lí, fregando forte col limone, riuscii a togliere la macchia. Poi tornai in sala da pranzo, rimisi a posto il tappeto e, soltanto allora, mi ricordai della lettera. Era indirizzata a me : Alfredo. L'aprii e lessi : " Ho fatto le pulizie. Il pranzo te lo cucini da te, tanto ci sei abituato. Addio. Io torno da mamma. Agnese." Per un momento non capii nulla. Poi rilessi la lettera e alla fine intesi : Agnese se ne era andata, mi aveva lasciato dopo due anni di matrimonio. Per forza di abitudine, riposi la lettera nel cassetto della credenza dove metto le bollette e la corrispondenza. Quindi presi il cappello e uscii di casa.

(25)

2. Read the passage below, then answer the questions which follow it.

N.B.—The passage is NOT to be translated.

Da Castellammare di Stabia un autobus vi porta—se ve lo siete meritato, e cioè se sapete perforare la folla irrompente—ad Amalfi. Mi scavai una galleria fra gambe braccia e valigie, vidi passare sulla tortuosa carrozzabile che si solleva e ricade strenuamente fra tipiche balze alpine i comuni di Gragnano, 5 Pimonte, Agèrola, nei quali mentre da una parte si asciugano al sole gli spaghetti che presto o tardi mangerete, dall'altra cresce l'uva per il vino con cui se mi date retta potrete meglio gustarli.

E d'improvviso il mare riapparve, a una distanza enorme sotto di noi, come dal fondo di un pozzo : era di un azzurro compatto e fermo, spietato, terribile, 10 che andò sciogliendosi, e vorrei dire umanizzandosi man mano che l'autobus scendeva, anzi precipitava in basso per atterrare (scusate) nella piazza dedicata a Flavio Gioia. Amalfi si ritiene patria di questo grande uomo (vi sono dubbi su ciò) al punto di erigergli una statua che lo riproduce mentre consulta la sua bussola,[1] e che non mi piacque : un marinaio tuttavia ci sta bene su quella 15 piazza che avendo come quarto lato il mare fa proprio pensare al ponte di una nave . . .

Mi avviai verso l'Albergo Cappuccini ; qualche raro passante, incontrandomi, mi dava la buona sera. " Ci conosciamo ? " avreste domandato ; ma no, era soltanto l'antica gentilezza di quella civilissima gente. Sulla terrazza dei 20 Cappuccini una iscrizione dettata da Di Giacomo ricorda che l'Albergo-Convento ospitò Longfellow, il poeta americano celebre. Qualche anno fa, poi, di americani ve ne furono qui a centinaia. Generosi, buoni, dice la servitú, finché non eccedevano nel bere. Altrimenti erano capaci, non so, di capovolgere i tavoli della sala da pranzo e adoperarli come carriole . . .

25 Me ne andai a dormire, anzi a guardare Amalfi dalla celletta assegnatami. Sul mare palpitavano le lampade dei pescatori ; tutte le finestre della città splendevano, Amalfi era fulgida, curva e preziosa come un anello.

[1] bussola = compass.

QUESTIONS

A. **Answer in English :—** *Marks*

1. What difficulties were encountered by the author when boarding his bus and how did he overcome them ? **2**

2. What is the road like between Castellammare di Stabia and Amalfi ?

   What can be seen from the bus which runs between the two places ? **4½**

3. (*a*) What did the sea look like to the author when he first caught sight of it ? Why did it look like this ?

   (*b*) When the author came close to the sea, how did its appearance contrast with his first impression of it ? What special quality did he then attribute to the sea and why ? **5½**

4. (*a*) Why is there a statue of Flavio Gioia at Amalfi ? Is its presence there fully justified ?

   (*b*) " un marinaio . . . ci sta bene su quella piazza " (lines 14/15). What does this statement mean ? What reasons has the author for making it ? **3½**

5. What did the author find noteworthy about the behaviour of the people of Amalfi ? How does he explain it ? **2½**

6. (*a*) What was the connection between Longfellow and the author's hotel ? How did the author learn about it ?

   (*b*) What did he learn about Longfellow's compatriots and from whom ? **5½**

7. Explain why the author compares the view from the window of his bedroom with a precious ring. **1½**

B. **Answer in Italian :—**

8. Perché chiede scusa l'autore dopo avere adoperato la parola " atterrare " ? (line 11). **3**

9. Perché dice l'autore che le lampade dei pescatori " palpitavano " ? (line 26). **2**

30

1959

SCOTTISH LEAVING CERTIFICATE EXAMINATION

ITALIAN

HIGHER GRADE—(SECOND PAPER (a))

AURAL COMPREHENSION TEST

Thursday, 12th March—1.30 P.M. to 2.0 P.M.

This paper must not be seen by any candidate.

INSTRUCTIONS TO THE TEACHER

1. Use the ten minutes preceding the beginning of the test to make yourself thoroughly familiar with the passage to be read.

2. When so instructed by the supervising offieer, read to the candidates the "Instructions to Candidates" given below.

3. Then read the passage aloud to the candidates, speaking clearly and naturally, and taking not more than **four minutes** to the reading.

4. After this reading inform the candidates that they may now turn over the printed question papers, and that they will have three minutes in whieh to study the questions. Remind the candidates that they may make notes during this interval of three minutes, but only on the sheets provided for the answers. You yourself will not be allowed to see the questions whieh are to be answered by the eandidates.

5. When so instructed by the supervising officer, read the passage a second time, in exactly the same manner as on the first occasion and taking the same amount of time.

6. Remind the candidates that the questions are to be answered in English.

[TURN OVER

INSTRUCTIONS TO CANDIDATES

1. Listen carefully to the following passage with a view to answering questions on its content.

2. The questions are to be answered in English.

3. You are on no account to touch the printed question paper or to do any writing until you are told to do so.

4. The procedure will be as follows :—

(i) The passage will be read **twice,** with an interval of three minutes between the readings.

(ii) After the first reading you will be allowed to turn over the printed question paper, and you will have three minutes in which to study the questions.

(iii) After the second reading you will write your answers on the sheet provided for this purpose.

5. All writing during the first and second readings is **strictly forbidden.** Notes may be made during the interval between the readings, but only on the sheet provided for the answers.

6. You may not ask for the repetition of any word or phrase.

Passage to be read to the candidates :—(Maximum time of reading—four minutes.)

Una strana guida

Partimmo alle tre della mattina. La guida prese ad aggirare il monte, finché non ebbe trovato una specie di canale inciso nella roccia viva, scabrosissimo e nudo. Sul principio, lui, nei punti piú difficili, si voltava e mi porgeva la mano, ma fresco di forze avevo respinto l'aiuto ; allora s'era messo a camminare per suo conto, abbandonandomi al mio destino. Pericolo di vita non c'era mai, ma quel vederlo su in alto mi faceva un dispetto acerbo. Gli gridai di fermarsi, ma la mia voce non gli arrivò. Finalmente lo vidi seduto a terra ad aspettarmi, e lo raggiunsi di cattivo umore.

Era spuntato il sole ; egli s'era levata la giacca e la portava sul braccio. Dalla cinta di cuoio gli pendeva un'accetta, istrumento insolito alle guide. " Perché portate quell'accetta ? " gli domandai.

" La porto sempre ", rispose.

" Per farne che ? "

Non disse niente.

Mi guardò bene fisso e aggiunse :

" Ho anche una pistola, guardi ".

Cominciavo a sentirmi vivamente inquieto. Egli se ne accorse e diventò subito gioviale e verboso ; mi conosceva, sapeva che ero uno scrittore, che avevo scritto delle opere per il teatro ; ma se volevo ascoltarlo egli sí che me ne avrebbe raccontate delle storie ! Nel fondo degli occhi gli tremava una inquietudine timida e umile che aveva finito per rassicurarmi interamente. Anche di questo si avvide, e mi disse :

" Lei ha pensato male di me. Non sono un birbante, venga qui e capirà tutto."

Eravamo ai primi nevai. La montagna intorno era tutta una rovina di massi giganteschi, mezzo affondati in un terreno sabbioso, molle per la neve sciolta. Mi condusse per mano nel labirinto finché giungemmo ad una specie di grotta formata da due massi. Entrò nel cavo e ne uscí con un pacco involto in stracci laceri ; lo sciolse e ne trasse sigari e tabacco.

Era un contrabbandiere. Scendendo di Svizzera, disseminava la sua mercanzia in tanti nascondigli diversi, perché, se mai, non avesse a cadere tutta nelle mani delle guardie.

1959
SCOTTISH LEAVING CERTIFICATE EXAMINATION

ITALIAN

HIGHER GRADE (SECOND PAPER (a))

AURAL COMPREHENSION TEST

Thursday, 12th March—1.30 P.M. to 2.0 P.M.

Answers are to be written on the sheet provided for the purpose, on which are also to be written any notes made between the readings.

QUESTIONS

Marks

1. At what time did the author and his guide set out ? Describe the route they took at the beginning of the climb. **2**

2. Why was the author annoyed by the guide's behaviour during the first part of the climb ? What did the author not succeed in doing ? Why was his annoyance not fully justified ? **2**

3. Explain what suddenly caused the author alarm. Why had he not noticed this previously ? When questioned, how did the guide reply ? **2**

4. How did the guide react to the author's show of alarm ? How did he try to reassure him ? What finally convinced the author that the guide meant no harm ? **3**

5. How far had the climbers got before the guide disclosed his secret ? What was the mountain like at this point of the climb ? **2**

6. Where did the guide take the author ? Describe the package he showed him and its contents. **2**

7. What was the guide's secret occupation ? To what use did he put the natural features of the mountainside ? **2**

15

(C64652)

1959
SCOTTISH LEAVING CERTIFICATE EXAMINATION

ITALIAN

HIGHER GRADE—(SECOND PAPER (b))

Thursday, 12th March—2.15 P.M. to 4 P.M.

N.B.—Begin the answer (or fair copy of an answer) to each question on a fresh page.

Marks will be deducted for writing that is difficult to read.

The value attached to each question is shown in brackets after the question.

1. Translate into Italian :

It was the end of March, and the weather was mild for the season. Edward arrived at the pit[1], and it was sufficiently light for him to perceive that the covering had been broken, and therefore, in all probability, something must have been trapped. He sat down and waited for daylight, but at times he thought he heard a heavy breathing, and once a low groan. This made him more anxious, and again and again he tried to look into the pit, but could not for a long while discover anything, until at last he thought he could see a human figure lying at the bottom. Edward called out, asking if there was anyone there. A groan was the reply, and now Edward was horrified at the idea that somebody had fallen into the pit, and had perished, or was perishing for want of succour. Recollecting that the rough ladder which he had made yesterday was against an oak tree, close at hand, he ran for it, and put it down the pit, and then cautiously descended. On his arrival at the bottom, his fears were found to be verified, for he found the body of a lad half-clothed lying there. Edward was afraid that he was not strong enough to lift him ; but on making the attempt, he found out that the poor lad was light enough for him to carry him up the ladder, which he did without too much difficulty, and he managed to lay him safely by the side of the pit. **(50)**

[1] the pit = la fossa.

2. Write, in Italian, an essay on **ONE** of the following subjects.

Your essay should be from one to one and a half times the length of the translation of Question 1.

(*a*) Un avvenimento importante della mia vita.

(*b*) Una vecchia città storica.

(*c*) Un amico italiano vi ha chiesto di mandargli due libri di scrittori scozzesi. Scrivetegli una lettera, spiegando le ragioni della vostra scelta. **(25)**

(C64653)

S

Not

Not

Ans

Mar

N.B

1959

SCOTTISH LEAVING CERTIFICATE EXAMINATION

SCIENCE

LOWER GRADE

Wednesday, 11th March—1.30 P.M. to 4.0 P.M.

Not more than EIGHT questions, which must be chosen from TWO Sections, should be attempted.

Not more than FIVE questions may be taken from any one Section.

Answers should, wherever possible, be illustrated by clear diagrams of reasonable size.

Mathematical tables, which include a table of atomic weights, will be supplied to those who desire them.

N.B.—Write legibly and neatly, and leave a space of about half an inch between the lines.

Marks will be deducted for bad spelling and bad punctuation, and for writing that is difficult to read.

The value attached to each question, or to each part of a question, is shown in the margin.

USE A SEPARATE ANSWER BOOK FOR EACH SECTION

[TURN OVER

SECTION I—Physics

Marks

1. (*a*) With the aid of a sketch explain the working of a simple wheel and axle. Describe how you would find experimentally the efficiency of the machine for various loads. 7

(*b*) A uniform rod AB of length 100 cm. and mass 5 lb. rests horizontally on compression balances at C and D, C being 10 cm. from A, and D 10 cm. from B. When a mass of 15 lb. hangs from a point 26 cm. from B the readings on the balances at C and D are 5·5 lb. wt. and 14·5 lb. wt. respectively. Use this information to illustrate the conditions which are satisfied when a body is in equilibrium under the action of coplanar parallel forces. 5½

2. Describe an experiment to find the latent heat of steam. 7½

What mass of steam, under normal atmospheric pressure, if absorbed by 2,750 gallons of water at 47° F. will be sufficient to raise the temperature to 72° F.? 5

Latent heat of steam = 960 B.T.U. per lb.
Mass of 1 gallon of water = 10 lb.

3. What is true of the position, size, and nature of the image formed by a plane mirror? How would you verify by experiment your statement relating to the position of the image? 6

Show with the aid of a sketch the working of a simple form of periscope. 3½

Explain why a metre stick, partly immersed in water, may appear bent. 3

4. (*a*) Describe with the aid of a sketch how you would make a simple barometer. What reading would you take to measure the pressure of the air? State two improvements you would find in a Fortin barometer. 6½

(*b*) Explain how high and low notes are produced in a piano. 4

(*c*) A man standing 540 yd. from a high cliff hears an echo 3 sec. after firing a gun. Calculate the velocity of sound in air. 2

5. Make a labelled sketch to show the construction of a Leclanché cell. What is polarisation, and how is it limited in this cell? 5½

A cell of internal resistance 0·5 ohm and of E.M.F. 1·5 volts supplies a current of 0·3 amp. when attached to an external resistance. Find the value of this resistance. If a voltmeter is connected across the terminals of the cell what reading will it give when the current is flowing? 4

State (without giving reasons) how an ammeter may be adapted so that (i) its range as an ammeter is extended, (ii) it may be used as a voltmeter. 3

Marks

6. (*a*) A bar of steel AB is to be magnetised by electrical means so that the end A is a north pole. Sketch the arrangement you would use. **2**

(*b*) Given a cylindrical coil of insulated copper wire, a sensitive centre-reading galvanometer, and two bar magnets of different strengths, describe briefly the experiments you would carry out to illustrate the factors which determine the magnitude and direction of induced currents. **4½**

(*c*) Define *coulomb*. Describe fully the experiment you would carry out to coat a copper plate with a firm layer of pure copper. **6**

7. (*Turn over.*)

SECTION II—Chemistry

Answers should, wherever possible, be supplemented by equations. Atomic weights will be found in the book of mathematical tables.

Marks

7. Describe fully how, starting from pure cupric oxide, you would find the equivalent weight of copper. $6\frac{1}{2}$

Calculate the weight of copper sulphate crystals ($CuSO_4.5H_2O$) that could be obtained from 10 gm. of cupric oxide. 4

Write the formulae of the chlorides and sulphates of both potassium and aluminium. 2

8. Show by means of a labelled sketch how you would prepare and collect several jars of carbon dioxide. How would you verify that the gas collected is a compound of carbon ? 8

Describe and explain all that happens when carbon dioxide is passed into lime water until no further action takes place. $4\frac{1}{2}$

9. Describe, with full experimental details, how, starting with sodium bicarbonate, you would prepare 500 c.c. of $\frac{N}{10}$ sodium carbonate solution. $5\frac{1}{2}$

Explain briefly how you would make use of the solution to find the normality of approximately $\frac{N}{10}$ hydrochloric acid. 3

What weight of (i) magnesium, (ii) magnesium oxide would react with 100 c.c. of N hydrochloric acid ? 4

10. How would you prepare and collect several jars of ammonia ? $6\frac{1}{2}$

State and explain how you would verify by chemical means that the gas collected is ammonia. 3

Indicate a reaction which can be used to show that ammonia contains nitrogen. 3

11. State the substances used in the preparation of hydrogen chloride, and write the equation for the reaction. $3\frac{1}{2}$

In what chemical respects does hydrogen chloride (i) resemble, (ii) differ from hydrogen sulphide ? 3

Describe the action of hydrogen sulphide on a solution of (i) lead nitrate, (ii) ferric chloride. In each case state the type of reaction involved. 6

12. Write equations for the action of heat on (i) sodium nitrate, (ii) lead nitrate. In the latter case how would you show that a mixture of gases is evolved ? $5\frac{1}{2}$

Which oxide of nitrogen may be mistaken for oxygen ? State how this oxide may be distinguished from oxygen. 3

List the practical steps taken in applying the " brown ring " test. 4

SECTION III—Botany

Marks

13. Choose **five** of the following plants and, for each, state the family to which it belongs :—

hawthorn, oat, red campion, shepherd's purse, daffodil, strawberry, white deadnettle. $2\frac{1}{2}$

For white deadnettle, or another member of the same family, make a labelled drawing of the flower, cut lengthwise. Comment on three special ways in which the structure of this flower is related to its function of reproduction. 8

Describe the fruit. 2

14. Make annotated diagrams to show differences which occur in the arrangement of the tissues in the root and stem of a young dicotyledonous plant, as seen in transverse sections. $9\frac{1}{2}$

How does a root differ from an underground stem in external appearance ? 2

Name any two plants with creeping underground stems. 1

15. For **either** broad bean **or** pea, make fully labelled drawings to show the structure of (i) a fruit, (ii) a seed. $5\frac{1}{2}$

Name two food reserves found in this seed and describe a test for the presence of each. 4

Explain how one of these reserves is made available for use at germination. 3

16. Describe experiments (one experiment for each) to show

(i) root pressure, 5

(ii) the considerable pull exerted by transpiring leaves. $5\frac{1}{2}$

State two reasons why plants in general will not grow successfully in water-logged soil. 2

17. Contrast briefly the processes of photosynthesis and respiration. 8

Given a potted geranium plant, how would you show by experiment that it is respiring ? $4\frac{1}{2}$

18. Of what advantage is leaf fall to a deciduous tree ? 2

Describe the sequence of events shortly before and at leaf fall. 7

By what agency are leaves converted into leaf mould ? Why is leaf mould a useful addition to garden soil ? $3\frac{1}{2}$

19. (*Turn over.*)

SECTION IV—Zoology

Marks

19. Describe how amoeba (i) reproduces, (ii) regulates its water content. 6

How, and under what conditions, does an amoeba encyst? What are the advantages of encystment? 4

Write a short note on any protozoon which is parasitic in man. 2½

20. Describe the part played by the following in the life of an earthworm :—pharynx, cerebral ganglia, setae, spermathecae. 8½

How does the oxygen necessary for respiration enter an earthworm's body and reach the various tissues? What is the significance of respiration in the life of the animal? 4

21. Draw a large labelled diagram of the heart and the main blood vessels in the anterior part of a dogfish (or skate) and show by arrows the course which the blood takes. 5½

What is meant by the statement "a fish is a cold-blooded animal"? 2

Explain how the external features of a dogfish (or skate) are related to its mode of life. 5

22. Make a labelled drawing of the alimentary canal and associated glands of a frog. 5

State two major differences in the alimentary systems of a frog and a rabbit (or other named mammal). How are these differences related to the feeding habits of the two animals? 4

What are the functions of bile, and in which organ is it produced? 3½

23. Write notes on the following with reference to man :—

(i) sweat glands,
(ii) reflex action,
(iii) the pulse,
(iv) the hip joint. 12½

24. Describe the appearance and habits of any **two** of the following animals :—newt, stickleback, snail, sea anemone, hermit crab, caddisworm. 12½

1959
SCOTTISH LEAVING CERTIFICATE EXAMINATION

SCIENCE

HIGHER GRADE—(BOTANY)

Thursday, 12th March—1.0 P.M. to 3.0 P.M.

FIVE questions in all should be attempted.

Answers should, where possible, be illustrated by clear diagrams of reasonable size.

N.B.—Write legibly and neatly, and leave a space of about half an inch between the lines.

Marks will be deducted for bad spelling and bad punctuation, and for writing that is difficult to read.

The value attached to each question, or to each part of a question, is shown in the margin.

Marks

1. For each of the following pairs of plants, list the floral characters (i) which the two members of the pair possess in common, (ii) which distinguish the two members :

Buttercup, apple.
Snowdrop, tulip. **10**

For each of the above plants name the family to which it belongs. **2**

For dandelion, or another named member of Compositae, make labelled drawings to show the structure of the inflorescence and the florets. Name the type of inflorescence. **8**

2. State the position of the following tissues in a dicotyledonous plant and describe the ways in which the structure of each is related to its function in the life of the plant :—

protoxylem, cambium, endodermis, cork. **20**

3. What do you understand by osmosis ? Describe an experiment to demonstrate this process. **7**

Make labelled drawings to show the detailed structure of (i) a root hair, (ii) guard cells. **8**

Write an account of the part played by osmosis in the activity of guard cells. **5**

[TURN OVER

Marks

4. How does the structure of a spirogyra cell enable the cell to make food for itself and to respire ? 6

Write an account of conjugation in spirogyra. 6

In what respects does sexual reproduction in fern (i) resemble, (ii) differ from, conjugation in spirogyra ? 8

5. Discuss fully the effects of the size of soil particles on the fertility of a soil. 9

Describe **two** experiments to compare the properties of sand and clay. 7

Write a note on the contribution made by plants to the formation and conservation of soil. 4

6. Describe an experiment to show that chlorophyll is necessary for photosynthesis. 5

Name one fungus and one totally parasitic flowering plant and describe as fully as you can how each of these plants nourishes itself in the absence of chlorophyll. 10

Name two insectivorous plants and explain the deficiency in food supply which these plants have to make good. 5

7. **Either,**

(*a*) How would you distinguish between a one-seeded fruit and a seed ? 3

Name **four** plants, two with dry and two with succulent fruits, which depend mainly on animals for the dispersal of their fruits or seeds. (Choose examples which differ widely.) For each, make labelled diagrams of the fruit ; state the type of fruit and the botanical nature of the part which aids dispersal. 14

Name a plant which is normally propagated vegetatively and, for this plant, state advantages of the method compared with propagation by seeds. 3

Or,

(*b*) Write an account of ways in which trees and other plants (i) obtain as much light as possible, (ii) secure effective dispersal of their fruits or seeds by wind. Give named examples and refer to observations made in your field studies. 20

1959

SCOTTISH LEAVING CERTIFICATE EXAMINATION

SCIENCE

HIGHER GRADE—(CHEMISTRY)

Wednesday, 11th March—1.30 P.M. to 3.30 P.M.

Not more than FIVE questions should be attempted. Answers should, wherever possible, be illustrated by clear diagrams of reasonable size and supplemented by equations.

The value attached to each question, or to each part of a question, is shown in the margin.

N.B.—Write legibly and neatly, and leave a space of about half an inch between the lines.
Marks will be deducted for bad spelling and bad punctuation, and for writing that is difficult to read.

ATOMIC NUMBERS AND APPROXIMATE VALUES OF ATOMIC WEIGHTS WILL BE FOUND IN THE BOOK OF MATHEMATICAL TABLES.

Marks

1. What do you deduce about the structure of atoms of magnesium from the statement, " Magnesium has an Atomic Number of 12 and has three isotopes of Atomic Weights 24, 25, and 26 " ? **6**

Deduce the valencies of tin given that

(i) the specific heat of tin is 0·055 ;

(ii) 1 gm. of tin displaces 190 c.c. of hydrogen at N.T.P. ; and

(iii) the percentage of tin in stannic oxide is 78·8. **6**

Describe, giving full experimental details, how you would verify the statement made in (ii). **8**

[TURN OVER

Marks

2. Describe how nitric acid is prepared in the laboratory. 5

Outline experiments to show that nitric acid contains (i) oxygen, (ii) nitrogen. 8

Write notes on the reactions which occur when (i) hydrogen sulphide, (ii) bromine water is added to a solution of sodium nitrite acidified with dilute hydrochloric acid. 7

3. Describe the preparation and purification of ethyl alcohol in the laboratory. 7

Write the full structural formulae for acetic acid and ethyl acetate. $3\frac{1}{2}$

Under what conditions will ethyl alcohol react with acetic acid? Write the equation for the reaction and state how you would recognize the presence of one of the products. $5\frac{1}{2}$

20 c.c. of acetylene were completely oxidized by explosion with 100 c.c. of oxygen in a eudiometer. Calculate the composition of the gaseous mixture left after the explosion, all volumes being measured at room temperature and pressure. 4

4. Describe the laboratory preparation of hydrogen chloride. 5

How would you show by analysis that the gas contains hydrogen? 4

What happens when ammonium chloride is heated in a test-tube (i) alone, (ii) mixed with a solution of sodium hydroxide? 4

2·00 gm. of an ammonium salt were dissolved in water and the solution made up to 100 c.c. Samples of this solution, each of 25 c.c., were boiled with 25 c.c. portions of $\frac{N}{2}$ sodium hydroxide solution until the reaction was complete. The average volume of $\frac{N}{10}$ hydrochloric acid required to neutralize the excess alkali was 31·60 c.c. Calculate the equivalent weight of the ammonium salt. 7

5. What are the main properties of sulphuric acid? 4

State fully what happens when concentrated sulphuric acid

(i) is heated with copper; 3

(ii) is heated to 160°–180° C. with ethyl alcohol; 3

(iii) is added to crystals of potassium iodide; and 5

(iv) is slowly added to a solution of sodium nitrate and ferrous sulphate. 5

6. Describe, giving full experimental details, how you would obtain a sample of sodium bisulphate starting from sodium hydroxide. 5

State the reaction between caustic soda and (i) aluminium, (ii) sodium acetate. For each case state the conditions for the reaction. 6

Outline the process of manufacture of caustic soda from brine. 9

Marks

7. **Either**

(*a*) Write notes on the following :—

(i) The formation of blue flames on top of a coke fire. **3**

(ii) The use of ammonia as an antidote for chlorine gassing. **4**

(iii) The formation of stalactites. **4**

(iv) The separation of gaseous mixtures. **4**

(v) The removal of hydrogen sulphide in the manufacture of coal gas. **5**

Or

(*b*) Make a fully labelled diagram of the apparatus used to determine the gravimetric composition of water. List the measurements to be made, and show how they are used to obtain the result. **8**

Vapour density determinations of steam give a value of 9. Deduce from this value and from the gravimetric composition of water that the molecular formula of steam is H_2O. **4**

Give one piece of evidence which supports the view that water is a covalent compound. **2**

Write notes on the role of water in

(i) the reaction between chlorine and sulphur dioxide ; and

(ii) the preparation of barium sulphate by double decomposition. **6**

S

No

$g =$

An

Ma

N.B

The

1959
SCOTTISH LEAVING CERTIFICATE EXAMINATION

SCIENCE

HIGHER GRADE—(PHYSICS)

Thursday, 12th March—9.15 A.M. to 11.45 A.M.

Not more than **FIVE** questions should be attempted.

$g = 32$ *ft. per sec. per sec. or* 981 *cm. per sec. per sec.*

Answers should, wherever possible, be illustrated by clear diagrams of reasonable size.

Mathematical tables will be supplied to those who desire them.

N.B.—Write legibly and neatly, and leave a space of about half an inch between the lines.

Marks will be deducted for bad spelling and bad punctuation, and for writing that is difficult to read.

The value attached to each question, or to each part of a question, is shown in the margin.

[TURN OVER

Marks

1. Either

(*a*) What is meant by (i) the moment of a force about a point, (ii) the centre of gravity of a body ? 3

Describe the experiment you would carry out to verify the principle of moments for four non-parallel coplanar forces. 7

A stand, shown in the diagram, is of overall height 16 in. and rests on a horizontal table. The stand consists of a square base of side 6 in. and thickness 1 in. and two uniform rods of the same material as the base, each with a square section of side 1 in. The vertical rod AB is fixed at the centre of the square, and the horizontal rod CD is fixed at its mid-point and its edges are parallel to the corresponding edges of the square.

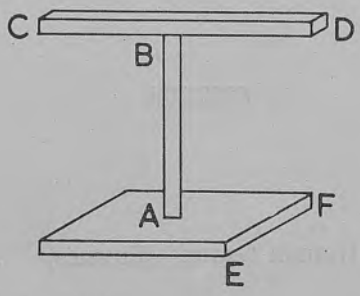

If CD is 10 in. in length, calculate :

(i) the height of the centre of gravity of the stand ; 5

(ii) the angle through which the stand may be tilted about the edge EF before it topples. 3

Find also the greatest mass which can be suspended from the middle of the edge at D without causing the stand to overturn, given that the total mass of the stand is 2 lb. 2

Or

(*b*) State three ' laws ' of friction. 3

Describe an experiment to determine as accurately as possible the coefficient of static (limiting) friction between two surfaces. 7

A wooden box of mass 50 lb. rests on a horizontal plank. If the coefficient of static friction between the box and the plank is 0·4, find :

(i) the horizontal force required to start the box moving along the plank ; 2

(ii) the magnitude and direction of the resultant reaction of the plank. 2

If the plank is tilted to an angle of 30° to the horizontal, calculate the least force acting parallel to the plank which is necessary to start the box moving up the plank. 6

2. State Newton's second law of motion and show how the unit of force in the F.P.S. system is derived from it. Name this unit. 5

Describe in detail an experiment to verify the relation between the force acting on a given body and the acceleration produced by the force. 7

An electric train of total mass 200 tons travels at a uniform speed of 30 miles per hour on a level track where the resistance to motion is equivalent to a constant retarding force of 15 lb. wt. per ton. Calculate the H.P. developed by the motor. 3

Assuming the retarding force of 15 lb. wt. per ton continues, find the constant braking force which would be sufficient to bring the train to rest in a distance of a quarter of a mile. 5

Marks

3. Show from theoretical considerations that the upthrust on a solid which is completely immersed in a liquid of uniform density is independent of the depth of immersion. 5

Sketch a graph which would illustrate clearly the relation between the volume of a fixed mass of gas and the pressure to which it is subjected, the temperature remaining constant. Describe in detail the experiment you would carry out to secure the data for the graph. 7

A cylindrical diving bell made of steel has an internal cross-sectional area of 20 sq. ft., an internal height of 10 ft., and a mass of 6 tons. The bell is held vertically and lowered into water by means of a cable of negligible weight until the water rises 6 ft. within the bell.

Calculate :

(i) the depth to which the bottom of the bell is submerged ; and 4

(ii) the tension in the cable. 4

Height of mercury barometer = 30 in.
Mass of 1 cu. ft. of water = 62·5 lb.
Specific gravity of mercury = 13·6
Specific gravity of steel = 7·6

4. **Either**

(*a*) Heat is applied at a steady rate to what is initially a block of ice at – 5° C. until the final temperature is 50° C. Illustrate graphically the changes in volume which accompany the passage of time and write a short note on each part of the graph. 6

Describe the experiment you would carry out to find the coefficient of apparent expansion of alcohol in glass and state how this coefficient is related to the coefficient of real expansion of alcohol. 8

A thermometer contains 10·20 gm. of mercury and the area of the cross-section of the bore at 0° C. is 0·001 sq. cm. Find the distance on the stem at 0° C. between the marks 0° C. and 40° C. 6

Density of mercury at 0° C. = 13·60 gm. per c.c.
Coefficient of linear expansion of glass = 0·000009 per C. degree.
Coefficient of real expansion of mercury = 0·00018 per C. degree.

Or

(*b*) Define *specific heat* and *latent heat*. 4

Describe in detail an experiment to determine the latent heat of steam. 8

A lead bullet of mass 20 gm. strikes a target and is just melted. Given that the temperature of the bullet before impact was 25° C., calculate the heat generated in the bullet on impact. 2

Assuming that all the energy of motion of the bullet is converted into heat and that 50 per cent. of the total heat generated is absorbed by the bullet, find the velocity of the bullet at impact. 6

Specific heat of lead = 0·03
Latent heat of fusion of lead = 5·4 calories per gram
Melting point of lead = 325° C.
1 calorie = 4·2 joules.

5. (*Turn over*)

Marks

5. Establish theoretically the inverse square law as it applies to photometry. 4

Describe in detail an experiment to compare the luminous intensities (or illuminating powers) of two sources of white light. 7

Show by means of an accurately drawn diagram where an object would have to be placed with respect to a concave *mirror* of radius of curvature 12 cm. to produce a real image twice the size of the object. 4

An object, 1·5 cm. high, is placed at a distance of 12 cm. from a *lens* and forms a virtual image one-third of the size of the object. Draw an accurate diagram to illustrate the formation of the image. Find, by measurement, the focal length of the lens, and state the type of lens. 5

6. A vertical tube closed at its lower end is of such a length that it produces its fundamental note when a vibrating tuning fork is held at its open end. Explain what is happening to the air in the tube and deduce the relation between the wave-length of the note emitted and the length of the air column in the tube. In what respect does the wave motion of the air in the tube differ from that in the air above the fork? 8

Write a formula for the frequency of a note produced by a stretched string, and state what each symbol represents and the unit in which each quantity is measured. 4

Describe an experiment to verify the relation between the frequency of the note and the vibrating length of the string. 4

A sonometer string of length 40 cm. gives a note of frequency 256 when under a tension of 4 lb. wt. If the tension is altered to 9 lb. wt. what adjustment must be made in the length of the string so that a note of frequency 512 may be produced? 4

7. State the relation between the diameter of a wire and its electrical resistance, and describe in detail an experiment by which the relation may be verified. 8

With the aid of a labelled sketch explain the working of a moving-coil ammeter. State and explain the special steps taken to ensure a uniform scale. 8

A moving-coil ammeter has a resistance of 20 ohms and gives a full-scale deflection with a current of 0·02 amp. How would you adapt the instrument to serve as a voltmeter reading to 10 volts? 4

8. State Faraday's laws of electrolysis. 4

Describe in detail an experiment to verify the law relating to chemical equivalents. 7

A copper voltameter is connected in an electric circuit in parallel with a coil of constant resistance 7 ohms immersed in 400 gm. of water contained in a jacketed calorimeter of negligible heat capacity. Current is supplied from a battery and after 30 min. 0·297 gm. of copper is deposited and the temperature of the water rises from 10° C. to 40° C. Calculate (i) the current taken by the voltameter, (ii) the current taken by the coil, and (iii) the power supplied by the battery. 9

E.C.E. of copper = 0·00033 gm. per coulomb

4·2 joules = 1 calorie.

Marks

9. State the laws of electromagnetic induction. **4**

Describe an experiment to illustrate the law relating to the direction of the induced e.m.f. **4**

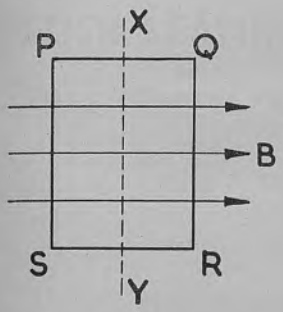

A rectangular coil of wire PQRS is placed with its plane parallel to a uniform magnetic field B. Explain what will happen in each side of the rectangle and hence in the coil as a whole when the latter is (i) moved at uniform speed at right angles to the field, (ii) rotated at uniform speed about axis XY. **8**

The axle of a railway carriage is 150 cm. long. Calculate the e.m.f. generated between the ends of the axle when the carriage is travelling at 90 kilometres per hour along a level track in an area where the vertical component of the earth's magnetic field is 0·4 lines per sq. cm. **4**

1959

SCOTTISH LEAVING CERTIFICATE EXAMINATION

SCIENCE

HIGHER GRADE—(ZOOLOGY)

Tuesday, 17th March—1.30 P.M. to 3.30 P.M.

FIVE questions in all should be attempted.

Answers should, wherever possible, be illustrated by clear diagrams of reasonable size.

N.B.—Write legibly and neatly, and leave a space of about half an inch between the lines.

Marks will be deducted for bad spelling and bad punctuation, and for writing that is difficult to read.

The value attached to each question, or to each part of a question, is shown in the margin.

Marks

1. Describe the methods of capture and ingestion of food in amoeba, paramoecium, and hydra. Trace the subsequent fate of the food particles in paramoecium and hydra, and for each animal state how solid residue is egested. **15**

How does paramoecium move from place to place and what happens when it encounters an obstacle in its path ? **5**

2. "Annelids are triploblastic coelomate Metazoa." State briefly what you understand by this statement. **4**

How does the body wall of earthworm perform its main functions ? **6**

Write an account of reproduction in earthworm. **10**

3. Draw a large labelled diagram of the brain of (i) dogfish (or skate), (ii) frog, as seen in dorsal view. **7**

In what major respects is the brain of a rabbit (or other mammal) more highly developed than that of a frog ? What advantages does this further development confer on the mammal ? **5**

Describe the structure of the inner ear of a mammal and explain briefly how it functions as an organ of balance. **8**

[TURN OVER

Marks

4. Make a large labelled diagram of that part of a frog's venous system through which blood is returned from all parts of the body posterior to the heart. (A **detailed** drawing of the heart is not required.) 7

Comment on any outstanding difference between the venous system of a frog and that of a rabbit (or other mammal). 3

Describe the structure of mammalian blood and write an account of the part played by the blood in combating disease and healing wounds. 10

5. Select **five** main distinguishing features of the class Aves and discuss their significance in a bird's mode of life. 20

6. Write notes on the following :— vitamins, hormones, enzymes. Refer to specific examples. 20

7. **Either**

(*a*) Select **four** of the following insects and for each state briefly the way in which it can affect man's welfare :— mosquito, flea, blowfly, ichneumon fly, Colorado beetle. 8

Choose a named butterfly (or moth) and make a large labelled drawing of its larva. 5

Write an account of the habits of both larva and imago of the named butterfly (or moth). 7

Or

(*b*) Symbiosis, commensalism, and parasitism are each conditions involving the association of two living organisms. By reference to named examples discuss the significance of these three types of relationship in the lives of the organisms concerned. 20

1959
SCOTTISH LEAVING CERTIFICATE EXAMINATION

SCIENCE—ENGINEERING

HIGHER GRADE—(APPLIED MECHANICS AND HEAT ENGINES)

Tuesday, 17th March—9.15 A.M. to 11.15 A.M.

Candidates should attempt **FIVE** questions.

When candidates use a formula they must explain each symbol. Units must always be stated.

Take $\pi = \frac{22}{7}$, and $g = 32$ ft. per sec. per sec.

Square-ruled paper and four-place logarithmic tables are provided.

N.B.—Marks will be deducted for bad spelling and bad punctuation, and for writing that is difficult to read.

The value attached to each part of each question is shown in brackets.

[TURN OVER

1. Figure 1 shows a breakdown-crane lifting a load of 3 tons at right-angles to the track. The wagon, which weighs 15 tons and has its centre of gravity at G, is prevented from overturning by beams projected from its underframe and loaded at the ends.

(*a*) Calculate the weight (W) which must be placed on the beams if, when lifting the load, the reaction force at R_2 is to be $3\frac{1}{2}$ tons ; (7)

(*b*) With the weight (W) in position, calculate—

(i) the maximum load which could be lifted before the crane would tend to overturn ; (7)

(ii) the reaction forces, R_1 and R_2, when lifting a load of 2 tons. (6)

FIG. I.

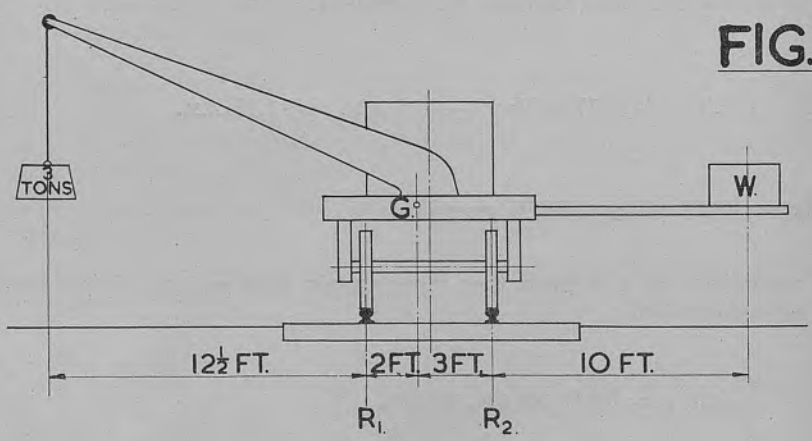

2. Define *Young's Modulus of Elasticity.* (3)

A compound strut consists of a brass bar $1\frac{1}{2}$ in. diameter placed in a steel tube, $1\frac{3}{4}$ in. outside diameter and $1\frac{1}{2}$ in. bore, both parts being exactly 10 in. long. The strut carries a compressive load of 8 tons.

Calculate—

(i) the loads carried by the bar and the tube respectively ; (10)

(ii) the amount by which the strut is shortened. (7)

Young's Modulus for steel = 13,000 tons per sq. in.

Young's Modulus for brass = 5,500 tons per sq. in.

3. A motor car, weighing 2,400 lb., has a tractive resistance of 60 lb. Starting from rest, it is allowed to run freely for 240 ft. to the foot of an incline of 1 in 15.

Determine—

(*a*) its speed at the foot of the incline ; (6)

(*b*) its kinetic energy at this point ; (3)

(*c*) the distance the car will run past this point before stopping, if the road is then level ; (3)

(*d*) the change of momentum of the car while running on the level for a distance of 20 ft. beyond the foot of the incline. (8)

4. Figure 2 shows three co-planar forces acting on the corners of a square plate having 10 in. sides. Determine graphically the equilibrant, stating its magnitude, direction and its line of action with reference to the centre O. Check your answer by calculation. **(8) (12)**

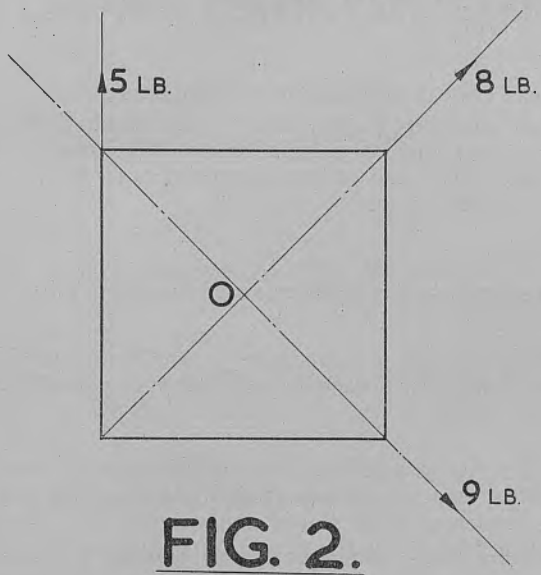

FIG. 2.

5. A steam-turbine uses 9,600 lb. of steam per hour at a pressure of 400 lb. per sq. in., superheated to 645° F., and exhausts into a condenser at a pressure of 2 lb. per sq. in. If the turbine runs at 1,500 r.p.m. and develops a shaft torque of 4,200 lb.-ft., determine its brake thermal efficiency. **(13)**

If the steam is supplied by a boiler of 80 per cent. thermal efficiency, using feed-water at 150° F., determine the fuel consumption per hour, the calorific value of the fuel being 12,500 B.Th.U. per lb. **(7)**

p (lb./sq. in.)	t (°F.)	h (B.Th.U.)	L (B.Th.U.)
400	445	425	793
2	126	94	1,020

Specific heat of superheated steam = 0·55.

6. Describe how you would carry out a test on a small steam-engine or internal-combustion engine in order to determine its thermal and mechanical efficiencies. Give brief descriptions of the instruments and apparatus which would be necessary and list under headings the data which would be required. **(20)**

7. (*Turn over.*)

7. State the advantages and disadvantages of compression-ignition engines as compared with the spark-ignition type. (6)

A diesel-electric locomotive has two 8-cylinder engines working on the 4-stroke cycle. The cylinders are each $12\frac{1}{2}$ in. diameter by 15 in. stroke and the two engines develop 1,200 B.H.P. at a speed of 650 r.p.m. The mechanical efficiency is 80 per cent.

Calculate—

(i) the mean effective pressure in the cylinders ; (9)

(ii) the fuel consumption per mile if the brake thermal efficiency is 35 per cent. and the calorific value of fuel used is 18,500 B.Th.U. per lb. The speed of the locomotive is 60 m.p.h. with an engine speed of 650 r.p.m. (5)

8. State the reasons why a condenser is used in a steam power plant whenever practicable. (4)

Explain how the pressure in a condenser is usually measured and state what would be the approximate reading of a gauge fitted to a condenser in which the pressure was $2\frac{1}{2}$ lb. per sq. in. (3)

A jet condenser has to deal with 3,000 lb. of steam per hour, which enters the condenser, 90 per cent. dry, at a pressure of $2\frac{1}{2}$ lb. per sq. in. If the cooling water enters the condenser at 65° F. and the water is to be extracted from the condenser at 110° F., determine the weight of cooling water required per hour. (9)

If, in winter, cooling water at 45° F. could be used, determine the percentage saving in cooling water which could be made, all other factors remaining unchanged.

p (lb./sq. in.)	t (°F.)	h (B.Th.U.)	L (B.Th.U.)	
$2\frac{1}{2}$	134	102	1,015	(4)

1959
SCOTTISH LEAVING CERTIFICATE EXAMINATION

TECHNICAL SUBJECTS

LOWER GRADE—(APPLIED MECHANICS)

Tuesday, 17th March—9.15 A.M. to 10.45 A.M.

Not more than **FOUR** questions should be attempted.

When candidates use a formula they must explain each symbol. Units must always be stated.

Take $\pi = \frac{22}{7}$.

Square-ruled paper and four-place logarithmic tables are provided.

N.B.—Marks will be deducted for bad spelling and bad punctuation, and for writing that is difficult to read.

The value attached to each part of each question is shown in brackets.

[TURN OVER

1. Figure 1 shows part of a railway points mechanism and consists of two levers ABC and DEF pivoted at B and E respectively. The levers are connected by the link CD. A force of 60 pounds is applied at A when the points are being changed.

Find—

(*a*) the force in the link CD ; (8)

(*b*) the magnitude and sense of the force exerted at X ; (7)

(*c*) the magnitude and direction of the reaction force at the pivot E. (10)

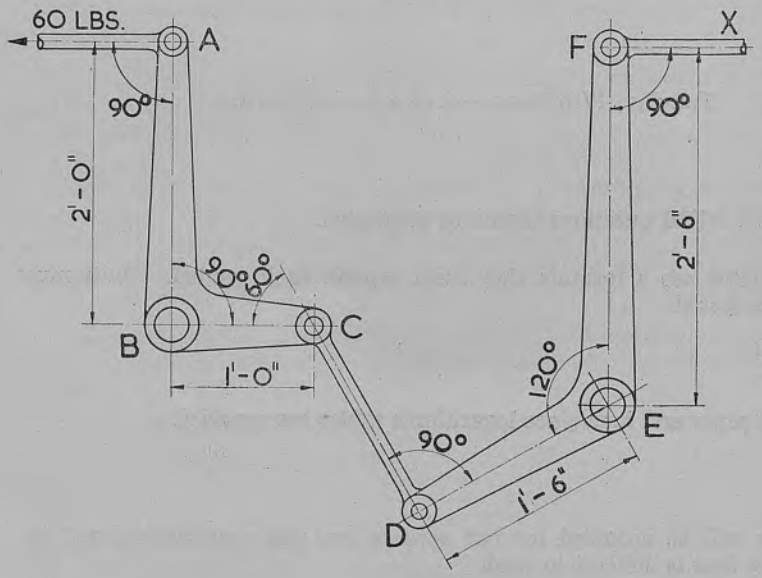

FIG. I.

2. A gear-driven screw jack is shown in Figure 2. The screw has four threads per inch, single start, square thread. The load is raised by the rotation of a hand operated bar which drives the wheel A through the wheel B.

The weight to be lifted is 12 cwt. and the efficiency at this load is 25 per cent.

Calculate—

(*a*) the velocity ratio ; **(10)**

(*b*) the work done in lifting the load through 5 in. ; **(7)**

(*c*) the force required at each end of the bar. **(8)**

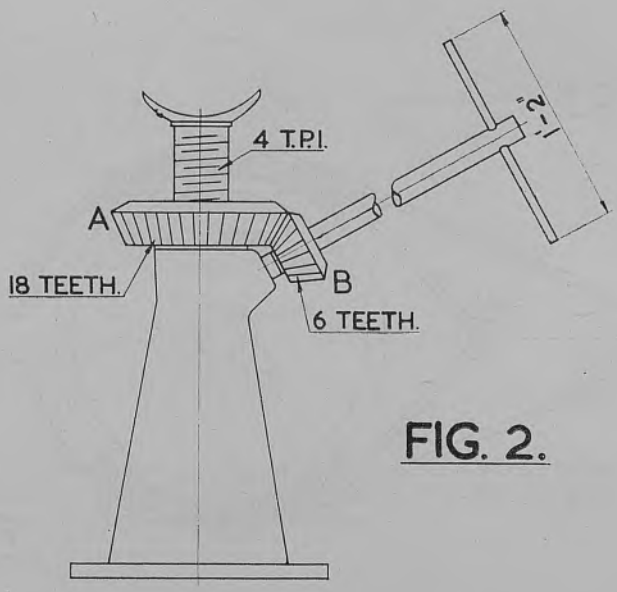

FIG. 2.

3. Figure 3 shows a band friction brake used for engine tests. The two halves of the band are hinged at A and the pressure between the brake blocks and the pulley is adjusted by the bolt BC. The coefficient of friction of the rubbing surfaces is 0·35 and the pulley is being driven at 750 r.p.m. The power absorbed is 3 BHP.

Calculate—

(*a*) the force applied to the spring balance S ; **(15)**

(*b*) the force exerted at BC. **(10)**

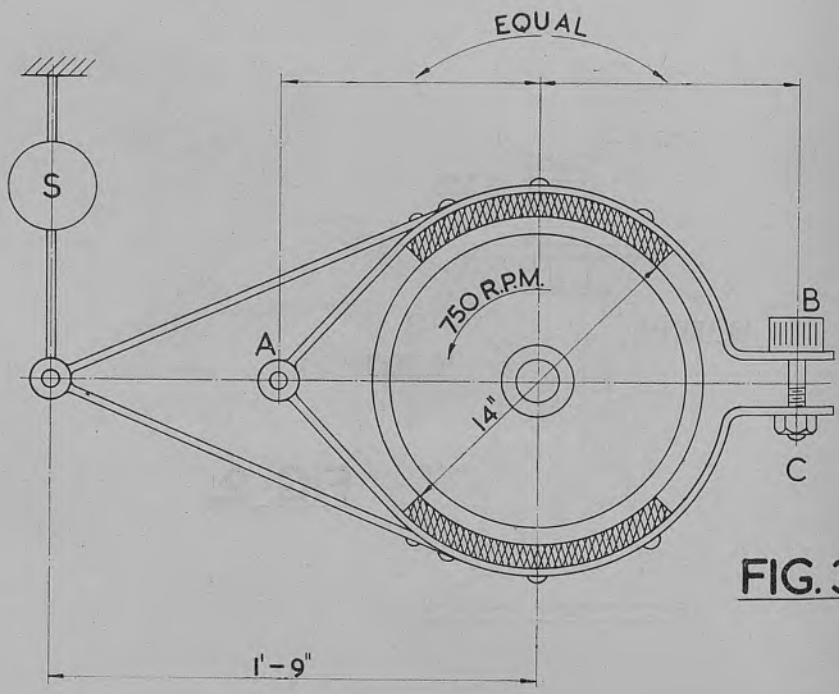

FIG. 3.

4. Figure 4 illustrates the junction of three chains, the links of which are all of $\frac{1}{4}$ in. diameter steel.

Determine the position on the ring of a fourth chain and the force to be applied to it so that the system is in the condition of static equilibrium. **(15)**

What is the value of the tensile stress in chain B ? **(10)**

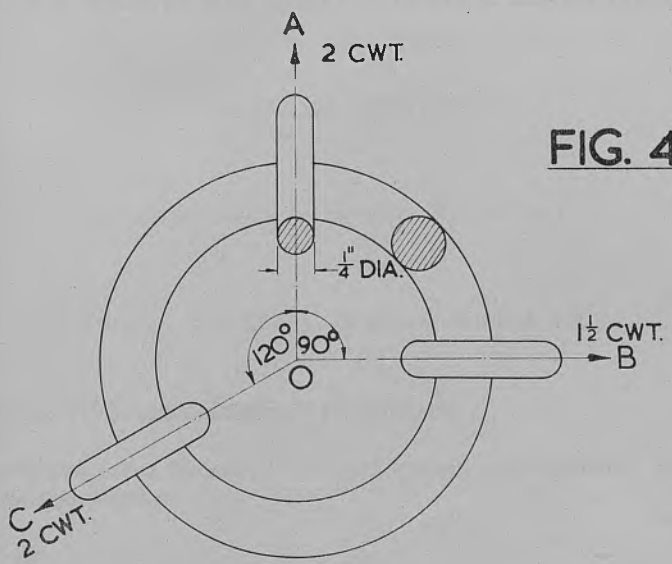

FIG. 4.

5. A 4-cylinder petrol engine, working on the 4-stroke cycle, has a piston swept volume of 40 cubic inches per cylinder and runs at 2,200 r.p.m. The mean effective pressure is 75 lb. per sq. in.

Determine—

(*a*) the indicated horse-power ; **(12)**

(*b*) the brake horse-power and shaft torque if the mechanical efficiency is 80 per cent. **(6), (7)**

1959
SCOTTISH LEAVING CERTIFICATE EXAMINATION

TECHNICAL SUBJECTS

HIGHER GRADE—(APPLIED MECHANICS)

Tuesday, 17th March—9.15 A.M. to 11.15 A.M.

Not more than **FIVE** questions should be attempted.

When candidates use a formula they must explain each symbol. Units must always be stated.

Take $\pi = \frac{22}{7}$, and $g = 32$ ft. per sec. per sec.

Square-ruled paper and four-place logarithmic tables are provided.

N.B.—Marks will be deducted for bad spelling and bad punctuation, and for writing that is difficult to read.

The value attached to each part of each question is shown in brackets.

[TURN OVER

1. Figure 1 shows a breakdown-crane lifting a load of 3 tons at right-angles to the track. The wagon, which weighs 15 tons and has its centre of gravity at G, is prevented from overturning by beams projected from its underframe and loaded at the ends.

(*a*) Calculate the weight (W) which must be placed on the beams if, when lifting the load, the reaction force at R_2 is to be $3\frac{1}{2}$ tons; (7)

(*b*) With the weight (W) in position, calculate—

(i) the maximum load which could be lifted before the crane would tend to overturn; (7)

(ii) the reaction forces, R_1 and R_2, when lifting a load of 2 tons. (6)

FIG. 1.

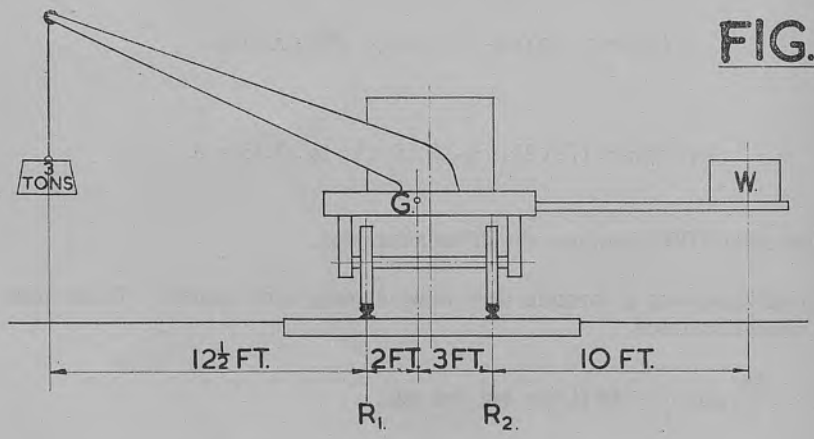

2. Define *Young's Modulus of Elasticity.* (3)

A compound strut consists of a brass bar $1\frac{1}{2}$ in. diameter placed in a steel tube, $1\frac{3}{4}$ in. outside diameter and $1\frac{1}{2}$ in. bore, both parts being exactly 10 in. long. The strut carries a compressive load of 8 tons.

Calculate—

(i) the loads carried by the bar and the tube respectively; (10)

(ii) the amount by which the strut is shortened. (7)

Young's Modulus for steel = 13,000 tons per sq. in.

Young's Modulus for brass = 5,500 tons per sq. in.

3. A motor-car, weighing 2,400 lb., has a tractive resistance of 60 lb. Starting from rest, it is allowed to run freely for 240 ft. to the foot of an incline of 1 in 15.

Determine—

(*a*) its speed at the foot of the incline; (6)

(*b*) its kinetic energy at this point; (3)

(*c*) the distance the car will run past this point before stopping, if the road is then level; (3)

(*d*) the change of momentum of the car while running on the level for a distance of 20 ft. beyond the foot of the incline. (8)

4. Figure 2 shows three co-planar forces acting on the corners of a square plate having 10 in. sides. Determine graphically the equilibrant, stating its magnitude, direction and its line of action with reference to the centre O. Check your answer by calculation. **(8) (12)**

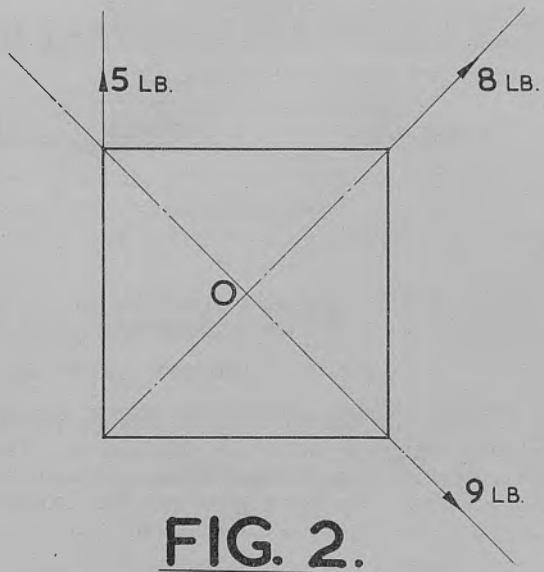

FIG. 2.

5. (*a*) An engine crosshead, weighing 300 lb., makes 150 strokes per minute in each direction along a path 2 ft. long. If the coefficient of friction between the crosshead and the slide-bars is 0·08,

calculate—

(i) the horse-power absorbed by friction ; **(8)**

(ii) the heat generated in B.Th.U. per minute. **(4)**

(*b*) If the coefficient of friction between a curling-stone and the ice is 0·006, find the velocity with which the stone must be delivered in order that it may travel 50 ft. before stopping. **(8)**

6. **(Turn over)**

6. Figure 3 shows the arrangement of a block and tackle used for hauling a load up a gradient of 1 in 10. All the sheaves are of the same diameter and the efficiency of the tackle is 90 per cent. The load weighs 500 lb. and has a frictional resistance of 120 lb.

Calculate the pull (P) required to haul up the load,

(*a*) at a constant speed ; (15)

(*b*) with an acceleration of 0·5 ft. per sec. per sec. (5)

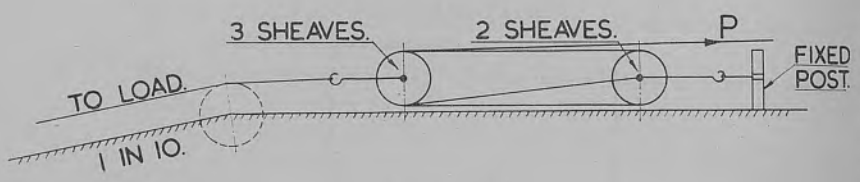

FIG. 3.

7. A grinding-machine is driven by an electric motor, the speed reduction from motor to machine being effected by two belt drives. The diameters of the pulleys on the motor shaft, countershaft and machine shaft are 9, 30 and 10, and 45 in., respectively. The motor speed is 1,200 r.p.m. and the operation of the machine requires a torque of 525 lb-ft. on its shaft.

Determine—

(*a*) the speed of the machine shaft ; (5)

(*b*) the horse-power required for the machine ; (5)

(*c*) the horse-power of the motor, if the overall efficiency of the drive is 93 per cent ; (2)

(*d*) the maximum tension in the belt connecting the motor pulley to the countershaft if the ratio of tensions is 2 to 1. (8)

1959

SCOTTISH LEAVING CERTIFICATE EXAMINATION

TECHNICAL SUBJECTS

LOWER GRADE—(TECHNICAL DRAWING)

Thursday, 12th March—1.0 P.M. to 3.0 P.M.

Question 1 should be attempted and either Question 2 or Question 3. The Figures are on a separate paper.

Both sides of the drawing paper should be used.

The value attached to each part of each question is shown in brackets.

1. Figure 1 shows two elevations of a machined casting which is to be used for a gear-casing.

Draw, full size—

(*a*) the given front elevation ; **(10)**
(*b*) the plan as a section on the horizontal line BB ; **(35)**
(*c*) a sectional end view on the vertical centre line AA. **(20)**

Fillets may be drawn freehand.

Show all hidden parts.

Do not give dimensions.

Either

2. The two elevations of a solid are shown in Figure 2.

Draw, full size—

(*a*) the given front elevation ; **(5)**
(*b*) the given end elevation ; **(5)**
(*c*) the plan. **(25)**

Note.—Show all construction lines.

Or

3. Figure 3 shows the elevation of a solid of revolution.

Draw, full size—

(*a*) the given elevation ; **(5)**
(*b*) the plan ; **(5)**
(*c*) the true shape of the section on line AA. **(25)**

Note.—Show all construction lines.

(C64404—1)

Tech. Drg.
(Lower)

1959
SCOTTISH LEAVING CERTIFICATE EXAMINATION

TO BE DISTRIBUTED WITH THE

LOWER GRADE TECHNICAL DRAWING

QUESTION PAPER

Figures

FIG. I.

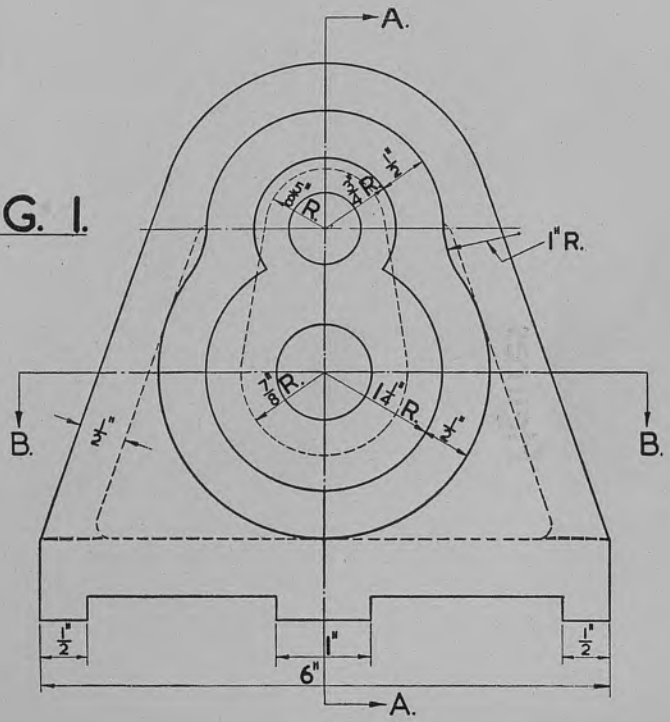

FRONT ELEVATION.

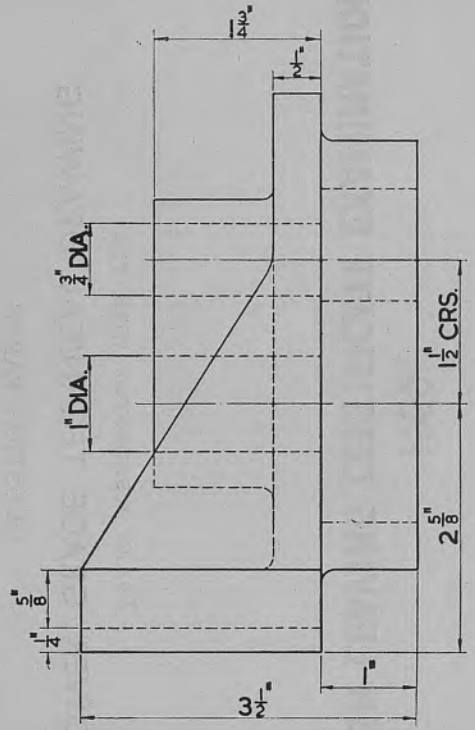

END ELEVATION.

FIG. 2.

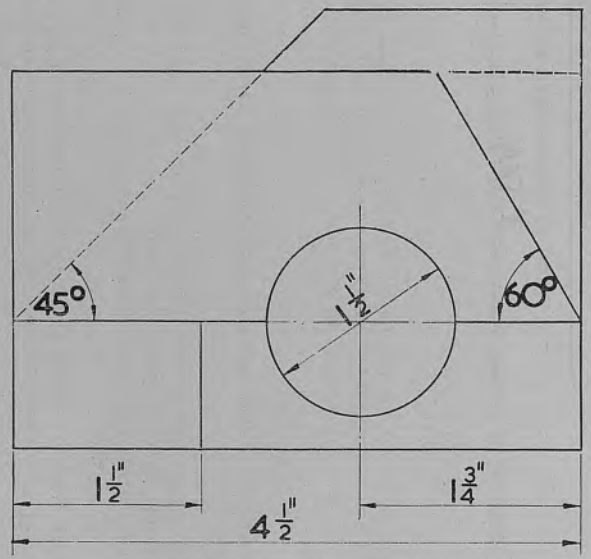

FRONT ELEVATION.

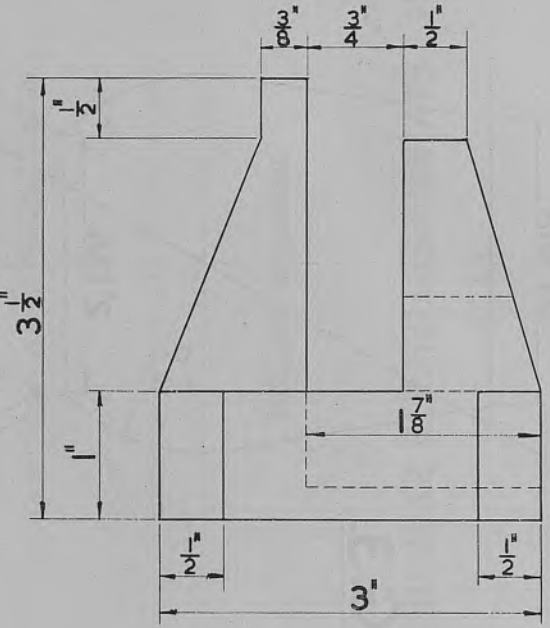

END ELEVATION.

FIG. 3.

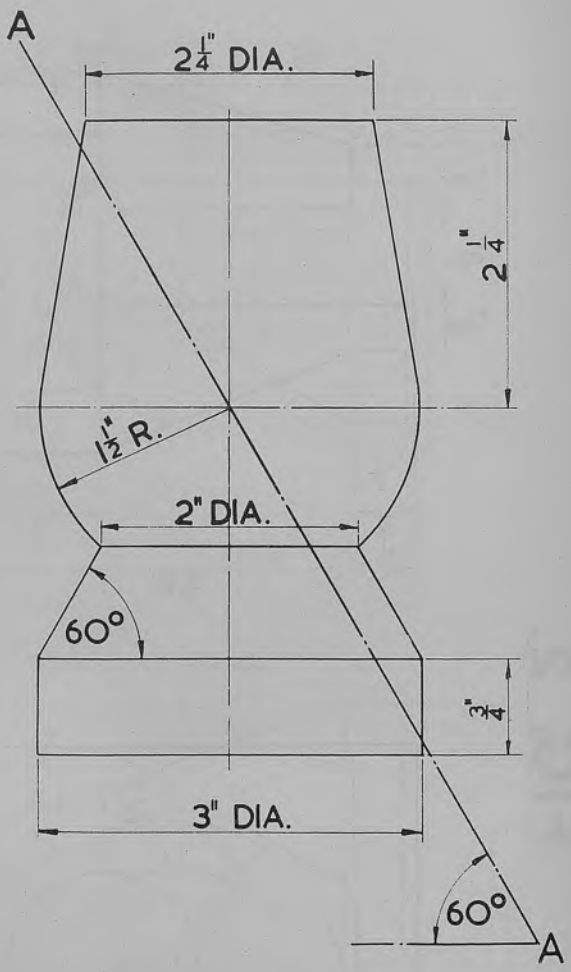

1959

SCOTTISH LEAVING CERTIFICATE EXAMINATION

TECHNICAL SUBJECTS

HIGHER GRADE—(TECHNICAL DRAWING)

Thursday, 12th March—1.0 P.M. to 4.0 P.M.

Question 1 should be attempted and EITHER Question 2 OR Question 3. The Figures are on a separate paper.

Both sides of the drawing paper should be used.

The value attached to each part of each question is shown in brackets.

1. Figure 1 shows details of a cylinder, with piston, etc., for operating a hydraulic mechanism. The cylinder is supported by a bracket and hinge bolt, the latter to permit of a small angular movement during working.

Draw, full size—

(*a*) an elevation of the assembly, showing the piston at the inner end of its stroke; **(20)**

(*b*) an end elevation, the portion to the left of the centre line of the cylinder being a sectional elevation taken through the axis of the hinge bolt and the portion to the right to be an outside elevation; **(20)**

(*c*) a plan, the portion below the centre-line of the cylinder, being shown as a sectional view taken on that centre-line. The piston should not be shown. **(25)**

Note.—Do not show hidden parts in (*b*) and (*c*).

[TURN OVER

Either

2. Figure 2 shows the elevation and the side elevation of a shaped block.

Draw, full size—

(*a*) the views given ; (5)

(*b*) a plan, projected from the elevation ; (10)

(*c*) an auxiliary elevation, projected from the plan, on the XY line shown. (20)

Or

3. Figure 3 shows the elevation and plan of a triangular bar joined to a vertical column.

Draw, full size—

(*a*) the views given, completing the plan to show the intersection of the two solids ; (20)

(*b*) an end elevation, looking from the left-hand side. (15)

Tech. Drg.

Higher

1959

SCOTTISH LEAVING CERTIFICATE EXAMINATION

TO BE DISTRIBUTED WITH THE

HIGHER GRADE TECHNICAL DRAWING

QUESTION PAPER

FIGURES

[TURN OVER

FIG. I.

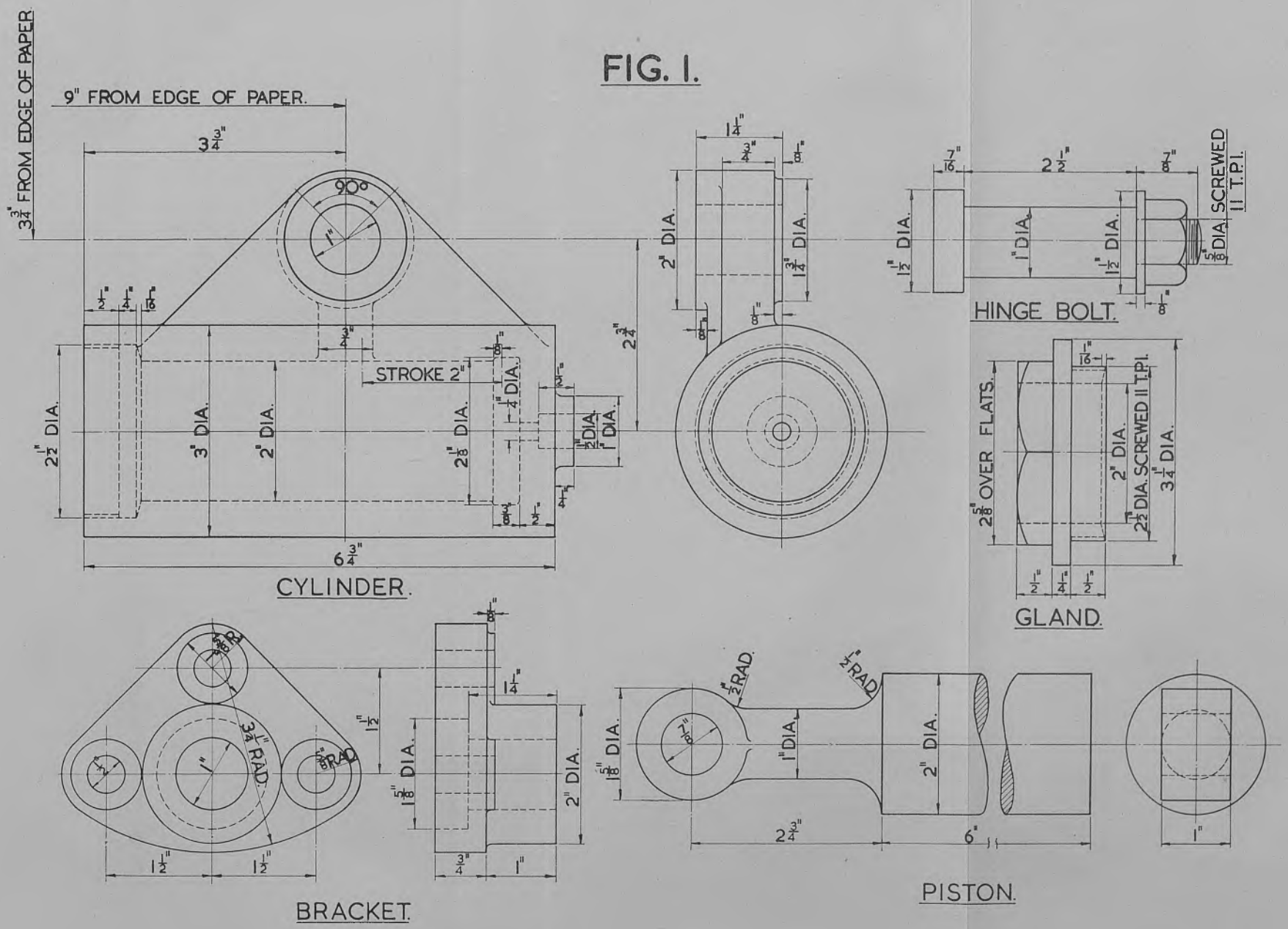

(C64405—2)

FIG. 2.

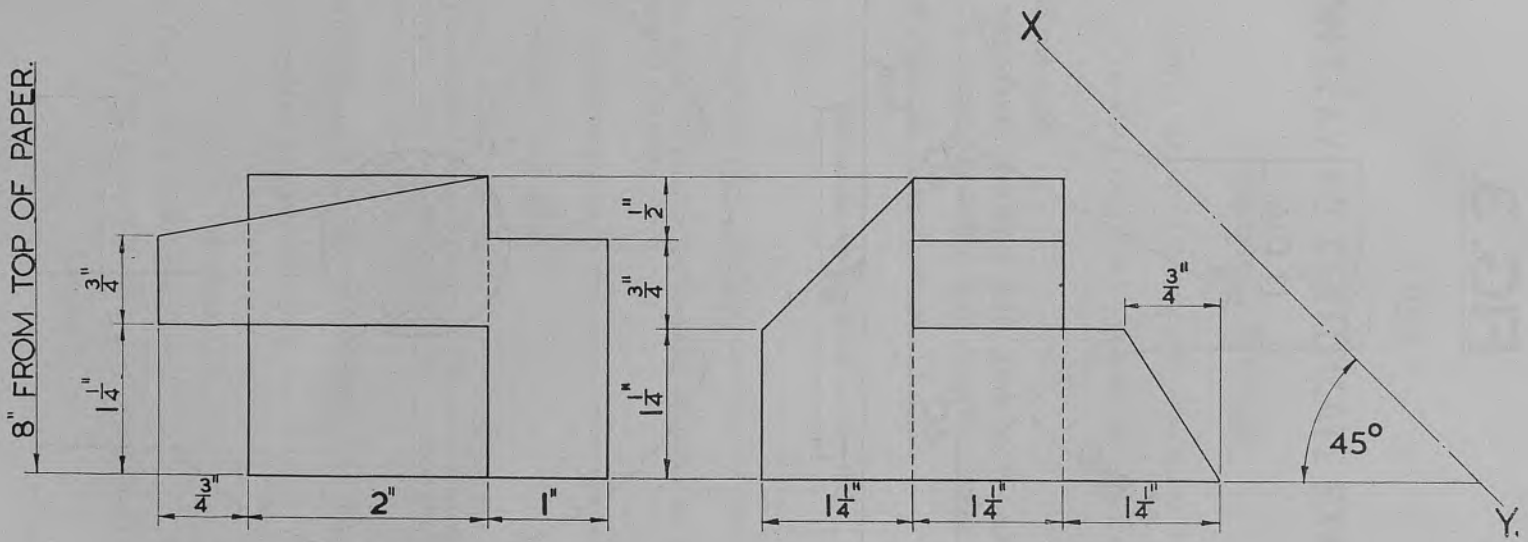

SIDE ELEVATION.

ELEVATION.

FIG. 3.

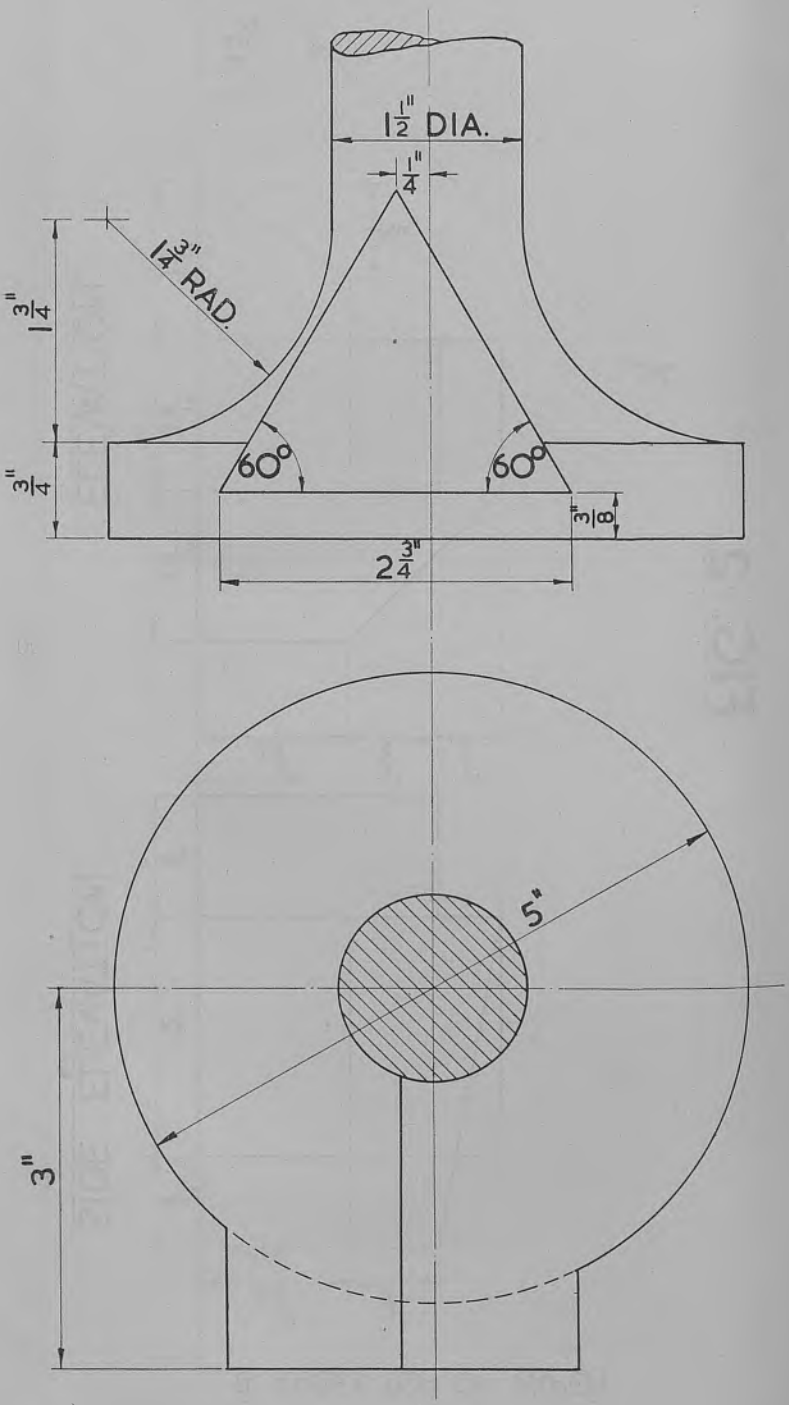

1959

SCOTTISH LEAVING CERTIFICATE EXAMINATION

TECHNICAL SUBJECTS

LOWER GRADE—(WOODWORK)—PRACTICAL TEST

Tuesday, 17th March—1.30 P.M. to 3.30 P.M.

Candidates should make

THE BOOK TROUGH END AND STAY (including THE MORTISE AND TENON JOINT)

the details of which are shown in sketch.

100 marks are assigned to this test

N.B.—

1. Read through the paper, studying carefully the details of the test.

2. **Do not make the shelf or the backrest but make the housing in the end and the mortise in the stay.**

3. If any dimension has been omitted use your own judgement.

4. Do not use files or glasspaper.

5. Additional wood is not allowed. If a mistake is made, work as closely as possible to the original sizes. Remember that clean cut and well set out work, even if incomplete, may earn more marks than inaccurate and badly finished work presumed to be complete.

6. No power operated machines should be used in this test.

7. Print your **name** and **school** on each piece of wood.

MATERIALS

Japanese Oak or other suitable hardwood.

1 piece 15 in. by $2\frac{1}{8}$ in. by $\frac{3}{4}$ in. planed to correct thickness.

1959

SCOTTISH LEAVING CERTIFICATE EXAMINATION

TO BE DISTRIBUTED WITH THE

WOODWORK LOWER GRADE

PRACTICAL TEST PAPER

Figure

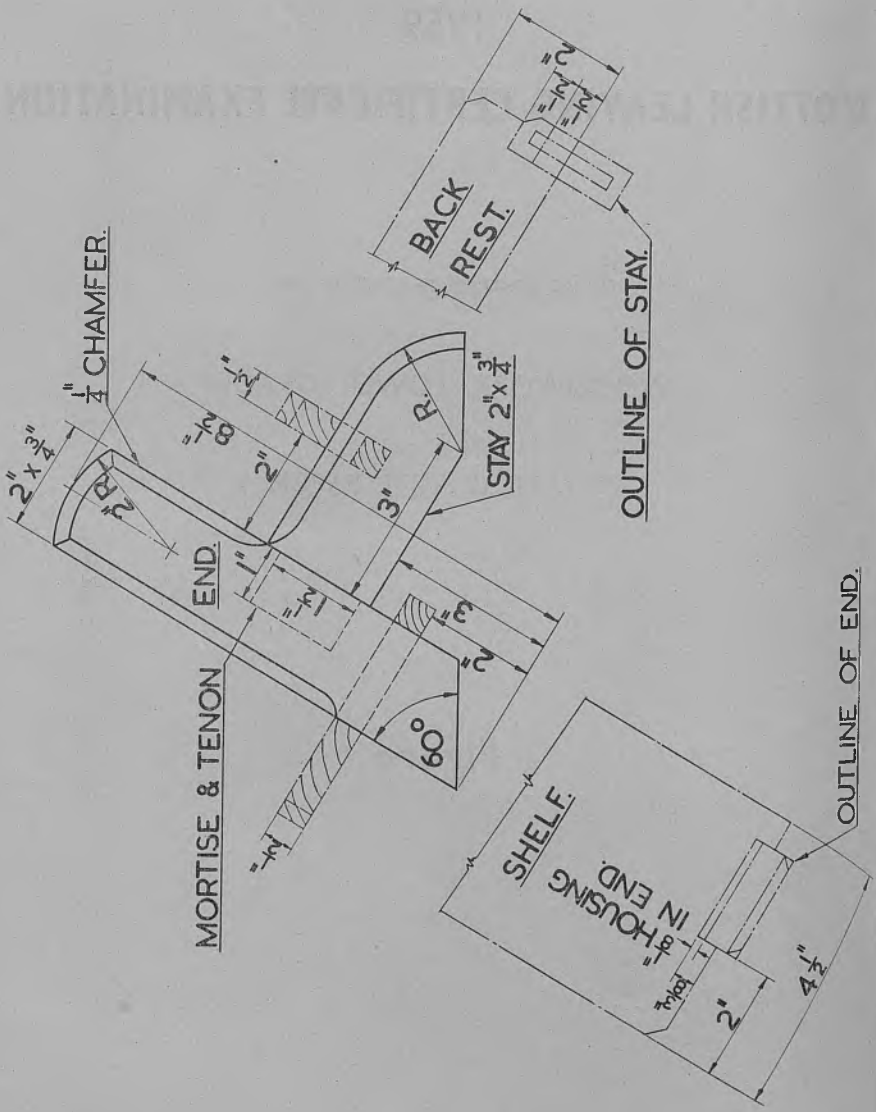
2" x 3/4"
1/4" CHAMFER.
MORTISE & TENON
END.
2"
3"
R.
STAY 2" x 3/4"
60°
BACK
REST.
OUTLINE OF STAY.
SHELF.
HOUSING
IN END.
2"
4 1/2"
OUTLINE OF END.

1959
SCOTTISH LEAVING CERTIFICATE EXAMINATION

TECHNICAL SUBJECTS

HIGHER GRADE—WOODWORK—PRACTICAL TEST

Monday, 16th March—9.15 a.m. to 12.15 p.m.

Candidates should make

PART OF A TABLE

the details of which are shown in sketch.

100 marks are assigned to this test.

N.B.—

1. Read through the paper, studying carefully the details of the test.
2. If any dimension has been omitted, use your own judgement.
3. Do not use files or glasspaper.
4. Additional wood is not allowed. If a mistake is made, work as closely as possible to the original sizes. Remember that clean cut and well set out work, even if incomplete, may earn more marks than inaccurate and badly finished work presumed to be complete.
5. No power operated machines should be used in this test.
6. Print your **name** and **school** on each piece of wood.

MATERIALS

Japanese Oak or other suitable hardwood.

1 piece 8 in. by $7\frac{1}{8}$ in. broad by $\frac{15}{16}$ in. planed to correct thickness.

1 piece 10 in. by $1\frac{3}{8}$ in. by $\frac{15}{16}$ in. planed to correct thickness.

1 piece 6 in. by 1 in. by $\frac{3}{4}$ in. planed to correct thickness.

(C64407—1)

1959
SCOTTISH LEAVING CERTIFICATE EXAMINATION

TO BE DISTRIBUTED WITH THE

WOODWORK HIGHER GRADE

PRACTICAL TEST PAPER

FIGURE

STRETCHER "C."
RAIL "B"
END "A."
FREEHAND CURVES.
"A"
"B"
"C"

1959
SCOTTISH LEAVING CERTIFICATE EXAMINATION

TECHNICAL SUBJECTS

LOWER GRADE—METALWORK—PRACTICAL TEST

Tuesday, 17th March—1.30 p.m. to 3.30 p.m.

Candidates should make

THE COAT AND HAT HOOK

the details of which are shown in the sketch

100 marks are assigned to this test.

N.B.—

1. Read through the paper, studying carefully the details of the test.

2. If any dimension has been omitted, use your own judgement.

3. Do not use emery cloth.

4. Additional metal is not allowed. If a mistake is made, work as closely as possible to the original sizes. Remember that well set out work, even if incomplete, may earn more marks than inaccurate and badly finished work presumed to be complete.

5. Print your **name** and **school** on a label and attach it to each piece of the finished work. Any sketches or devices made and used to assist your work must be similarly marked and handed to the Supervisor.

MATERIALS

1 piece pure aluminium S/B 4 in. by $2\frac{1}{2}$ in. by $\frac{1}{8}$ in.
1 piece pure aluminium S/B 10 in. by $\frac{3}{4}$ in. by $\frac{1}{8}$ in.

(C64408—1)

1959
SCOTTISH LEAVING CERTIFICATE EXAMINATION

TO BE DISTRIBUTED WITH THE

METALWORK LOWER GRADE

PRACTICAL TEST PAPER

Figure

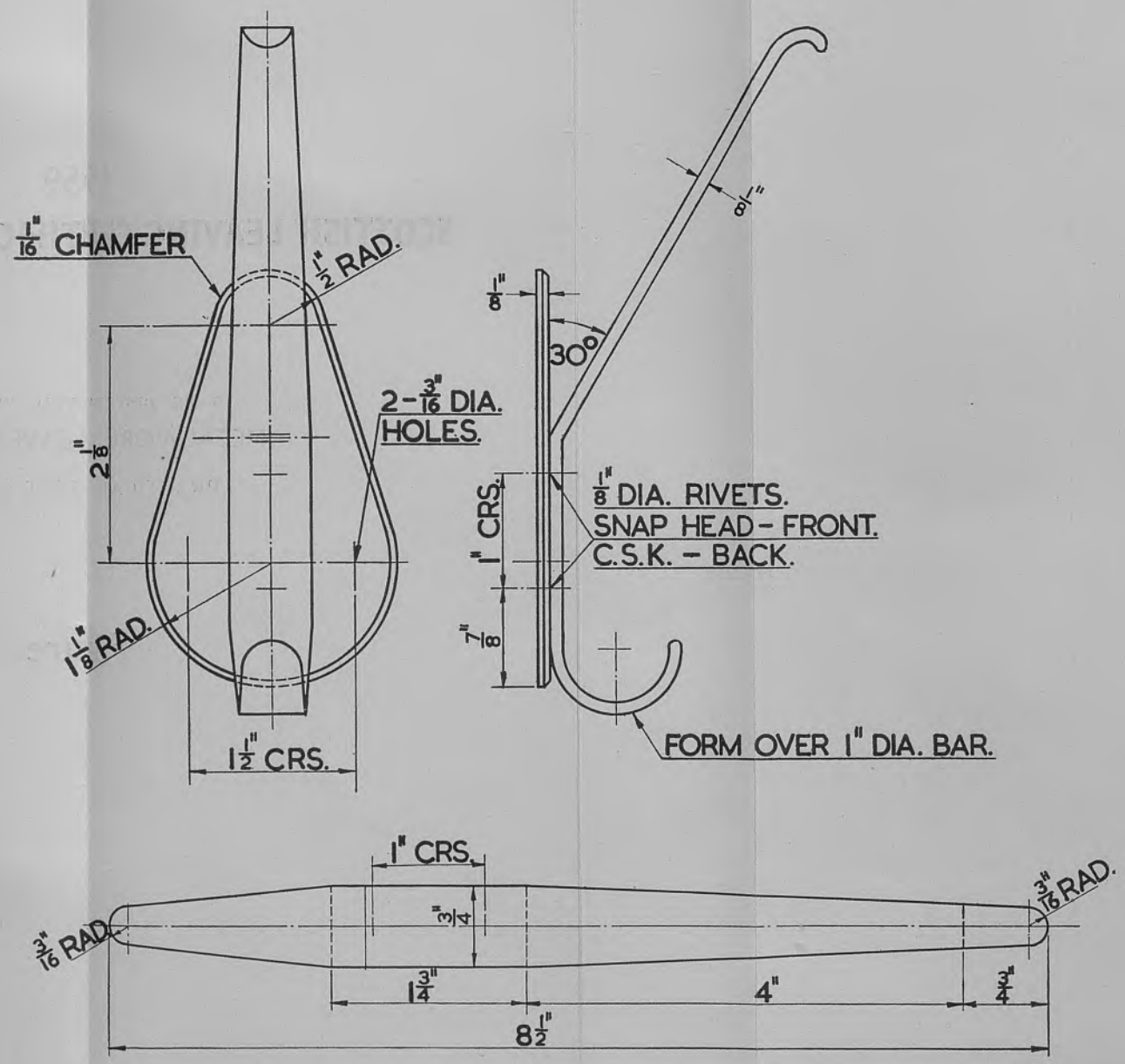

DETAILS OF STRAP BEFORE BENDING.

1959
SCOTTISH LEAVING CERTIFICATE EXAMINATION

TECHNICAL SUBJECTS

HIGHER GRADE—(METALWORK)—PRACTICAL TEST

Monday, 16th March—9.15 A.M. to 12.15 P.M.

Candidates should make

EITHER

ARTICLE No. 1, TINPLATE BOX

OR

ARTICLE No. 2, DOOR BOLT

the details of which are shown in sketches.

100 marks are assigned to this test.

N.B.—

1. Read through the paper, studying carefully the details of the test.

2. If any dimension has been omitted use your own judgement.

3. Do not use emery cloth.

4. Additional metal is not allowed. If a mistake is made, work as closely as possible to the original sizes. Remember that well set out work, even if incomplete, may earn more marks than inaccurate and badly finished work presumed to be complete.

5. Print your **name** and **school** on a label and attach it to each piece of the finished work. Any sketches or devices made and used to assist your work must be similarly marked and handed to the Supervisor.

MATERIALS

Article No. 1—1 piece XX tinplate $7\frac{1}{2}$ in. by $6\frac{1}{2}$ in.
1 piece XX tinplate 5 in. by $4\frac{1}{4}$ in.

Article No. 2—1 piece M.S. 4 in. by 3 in. by $\frac{1}{16}$ in.—filed to correct size.
1 piece M.S. 4 in. by $1\frac{1}{2}$ in. by $\frac{1}{16}$ in.—filed to correct size.
1 piece M.S. BRIGHT $8\frac{1}{4}$ in. by $\frac{1}{2}$ in. by $\frac{1}{4}$ in.
1 piece M.S. BRIGHT 5 in. by $\frac{1}{2}$ in. by $\frac{1}{4}$ in.
1 piece M.S. 3 in. by $\frac{7}{8}$ in. diameter.

(C64409—1)

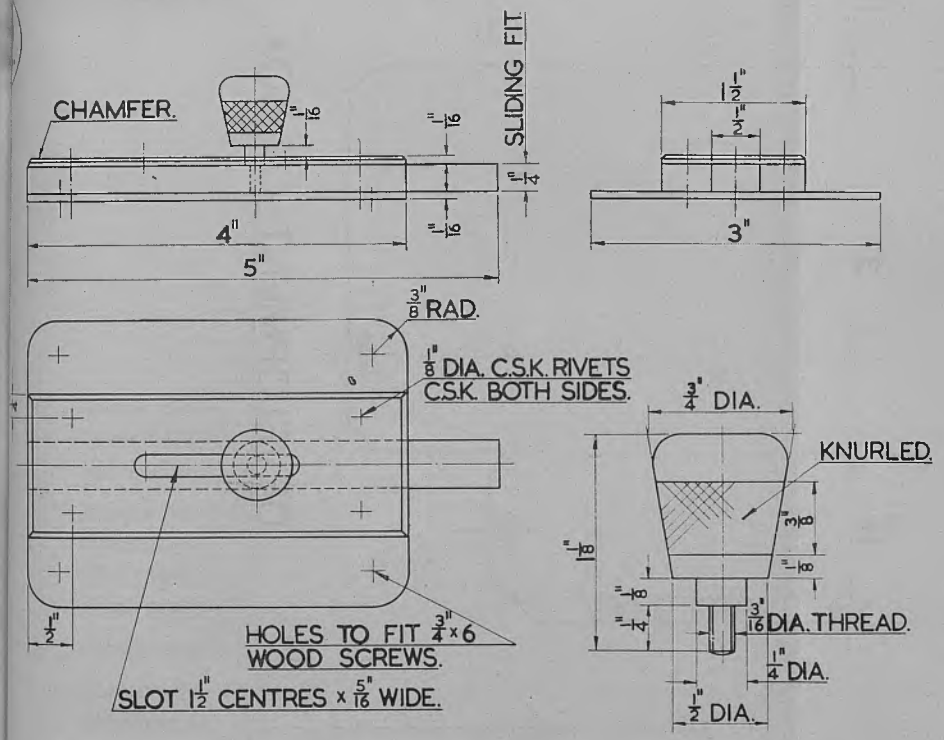

DETAIL OF HANDLE.

1959
SCOTTISH LEAVING CERTIFICATE EXAMINATION

TO BE DISTRIBUTED WITH THE

HIGHER GRADE METALWORK

PRACTICAL TEST PAPER

FIGURES

[TURN OVER

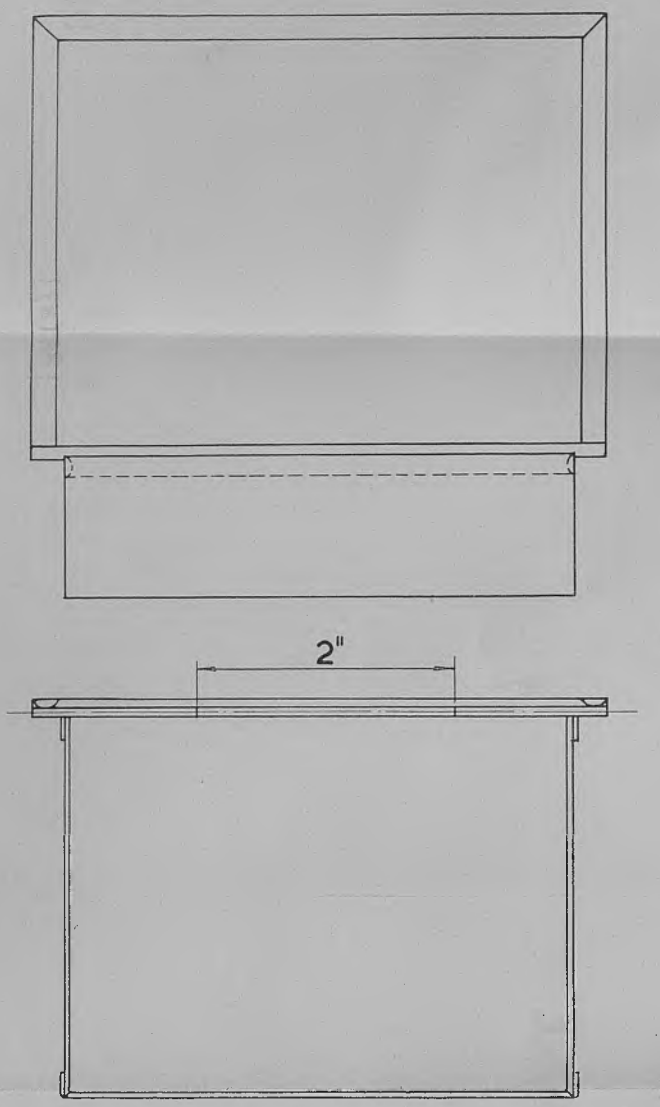

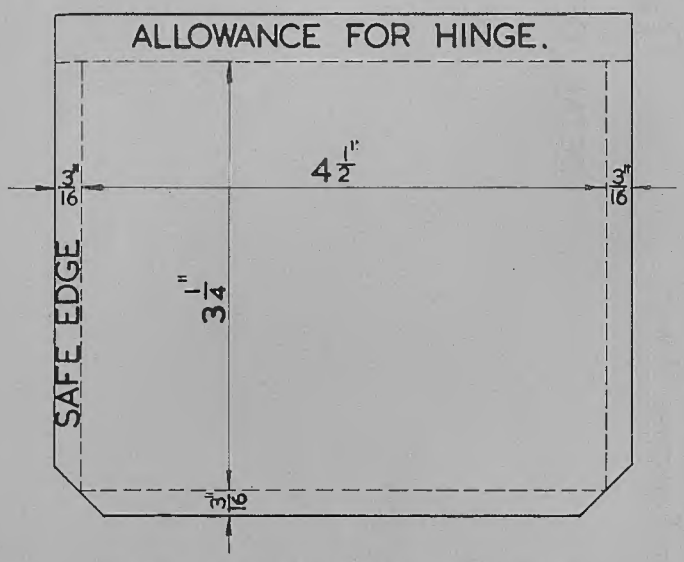

DEVELOPMENT OF LID.

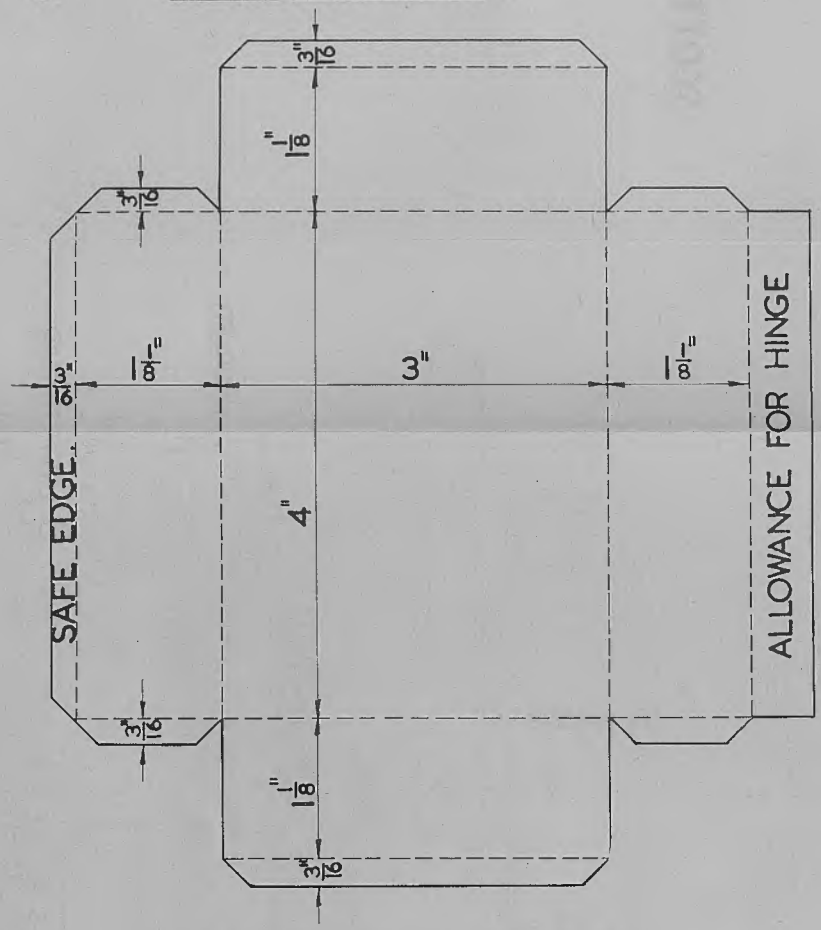

DEVELOPMENT OF BOX.

TURN OVER

1959
SCOTTISH LEAVING CERTIFICATE EXAMINATION

MUSIC

LOWER GRADE

Monday, 2nd March—1.30 P.M. to 3.30 P.M.

N.B.—Write in ink. Care must be taken to make the notation clear ; notes indistinctly placed will be regarded as wrong. Marks will be deducted for bad spelling and bad punctuation, and for writing that is difficult to read.

The answers to Section I must be written in the space provided on this examination paper, which must be given up with the examination book. The ruled pages in the examination book may be used for rough work on these questions.

The answers to Section II are to be written in the examination book provided.

The value attached to each question, or to each part of a question, is shown in brackets after the question.

Number of seat occupied at examination.

FILL THIS IN FIRST

Name of School.....

Name of Pupil .....

[TURN OVER

SECTION I

ALL the questions in this section should be attempted.

1. Write in staff notation a melody suitable for singing to the following stanza. Place each syllable of the words below the note or notes to which it is to be sung. Add a musical term to indicate tempo or mood, and insert expression marks where necessary. Mark with √ the places where the singer should take a breath. Words or phrases may be repeated.

" Man's life is but vain
For 'tis subject to pain
And sorrow, and short as a bubble ;
'Tis a hodge-podge of business
And money, and care,
And care and money and trouble."

Chalkhill.

(28)

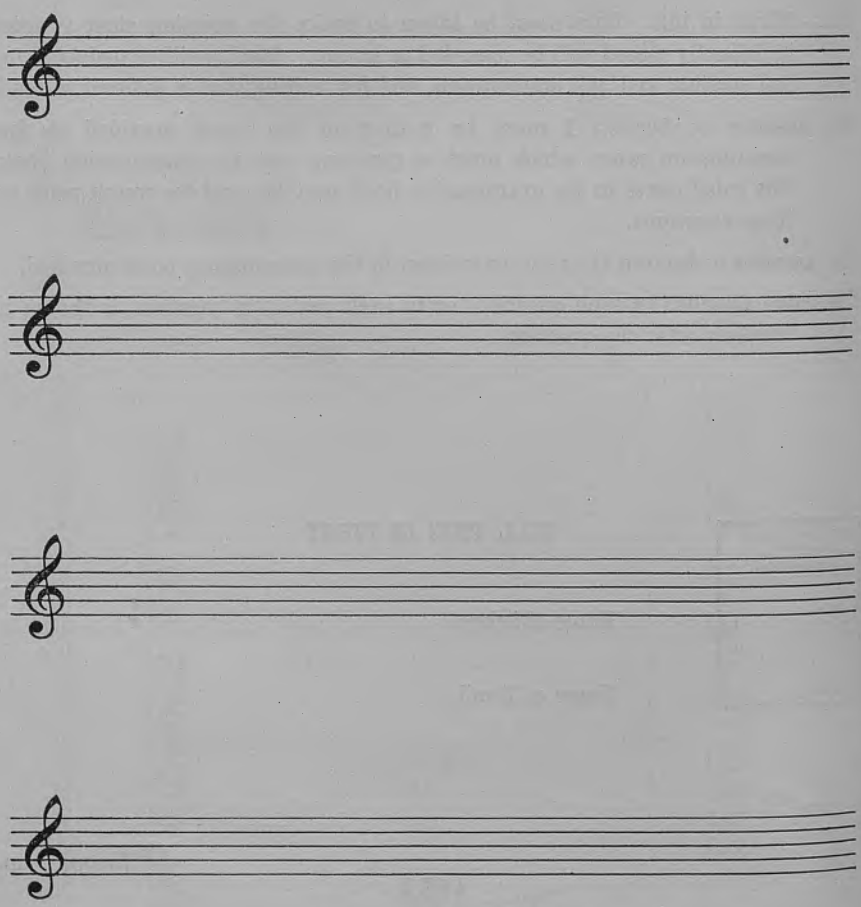

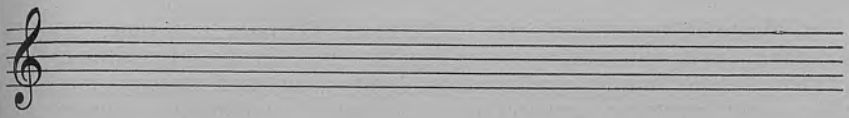

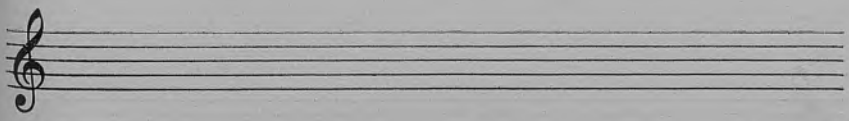

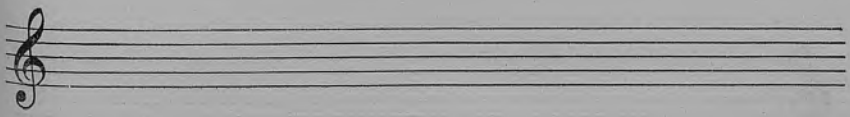

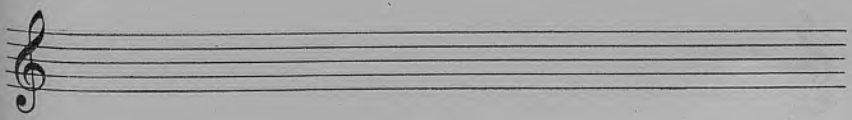

2. Write an eight-bar melody in the key of D minor, in $\frac{6}{8}$ time. Introduce a modulation to the relative major key, but finish in the original key. Insert phrasing marks, marks of expression, legato (slur) and staccato marks, and place at the beginning a musical term to indicate tempo or style of performance.

Make considerable use of the following rhythm :—

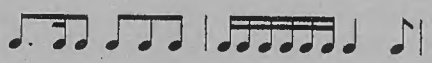

(28)

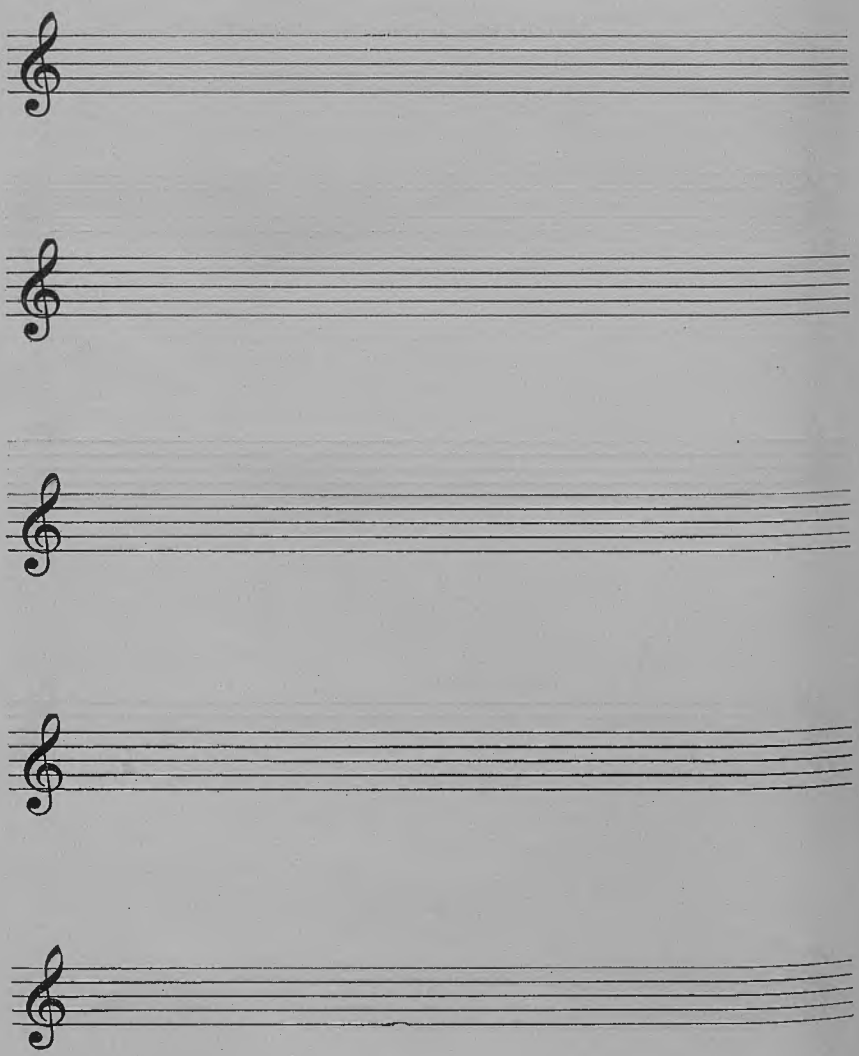

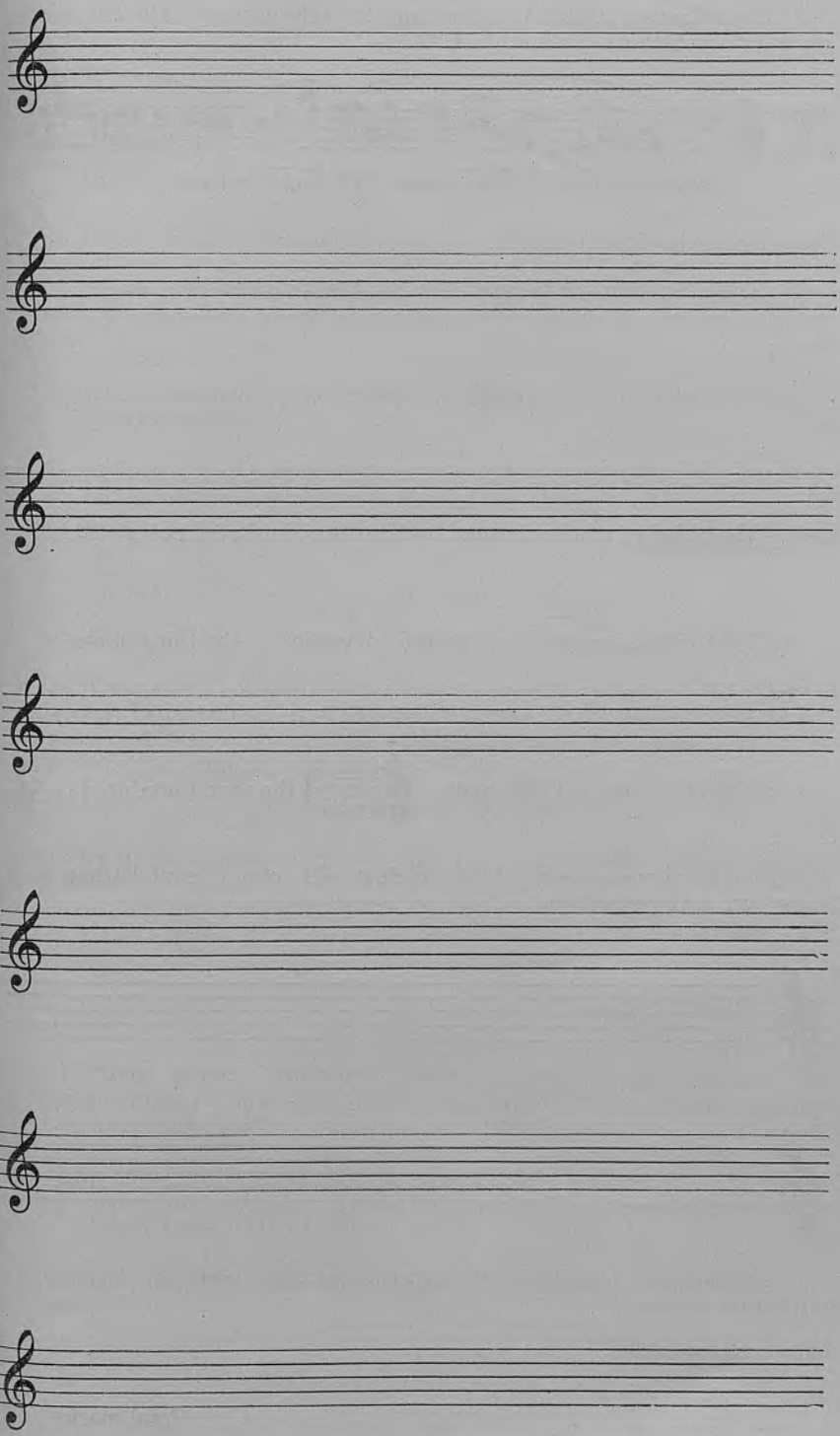

3. The following extract is taken from the solo part in " The Second Horn Concerto " by Strauss, for horn in E flat :—

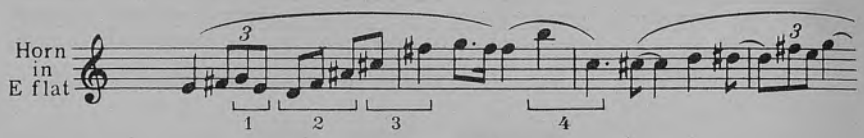

(*a*) Insert the time signature. (1)

(*b*) Name the intervals between the two bracketed notes at

1 .....

3 .....

4 ..... (3)

(*c*) What kind of triad is formed by the three bracketed notes at 2 ?

..... (2)

(*d*) What term describes the rhythmic deviation in the third phrase ?

..... (1)

(*e*) When the horn in E flat plays 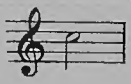 the sound produced is 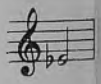

Write the above passage at the pitch it will actually sound when played. Do not use a key-signature. (6)

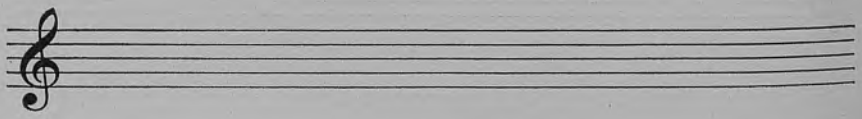

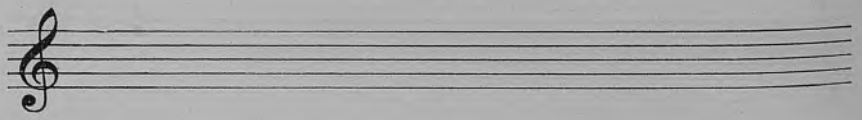

(*f*) Name any other piece of music containing a part for solo horn, not written by Strauss.

..... (1)

Total marks = (14)

SECTION II

Answer question 7 and ONE other question from this section.

4. (*a*) Briefly define " folk music ". (3)

(*b*) Name an 18th century composer, two 19th century composers, and two 20th century composers whose works frequently show the influence of folk music. (5)

(*c*) Name an example of such works by **TWO** of the composers you have named. (Two examples.) (2)

(*d*) Write in staff-notation four bars of any folk tune which begins on the dominant on an unaccented beat, followed by the tonic. (4)

(Total marks = 14)

5. (*a*) Write a brief account of the orchestral compositions of any **TWO** of the composers listed below. Refer to specific works, to the period during which the composer wrote, to the forms he preferred, and to the composition of the orchestra which he normally required.

BACH ; BEETHOVEN ; BERLIOZ ; BRAHMS. (10)

(*b*) Write in staff-notation at least four bars of any one of the works you have mentioned. (4)

(Total marks = 14)

6. (*a*) Briefly define " oratorio ". Your answer should indicate what comprises a typical oratorio, and should refer to the forces normally required for its performance. (4)

(*b*) Name two oratorios (or similar compositions) written by each of the following composers :—BACH ; HANDEL ; HAYDN ; MENDELSSOHN ; ELGAR ; VAUGHAN WILLIAMS. (6)

(*c*) Write in staff-notation at least four bars of any oratorio you have mentioned. (4)

(Total marks = 14)

7. (*a*) What is the meaning of "Etwas gedehnt"? (1)

(*b*) List the wood-wind and brass instruments, giving the number of each, used in the eoneerto you have been studying. Mark the transposing instruments with *. (4)

(*c*) What musical form does the eomposer use in the first movement of the string quartet preseribed for study? (1)

(*d*) Write in staff notation four bars of the solo passage for eor anglais which is eontained in one of the works preseribed for study. You may write your extract in the key used in the seore, or in the key in whieh the melody will sound. State whieh key you have ehosen. (4)

(*e*) Identify any **THREE** of the following exeerpts. Name the work, indicate the movement if it eontains more than one, the eomposer, and the date of eomposition. (6)

(Total marks = 16)

A

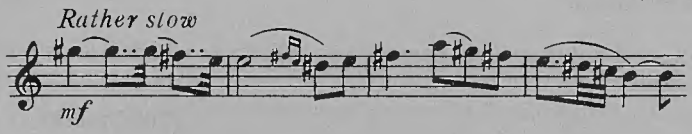

B

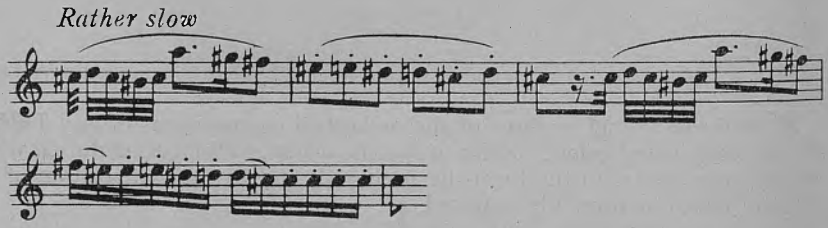

C

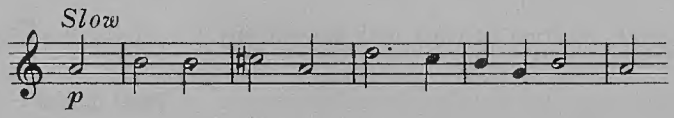

D

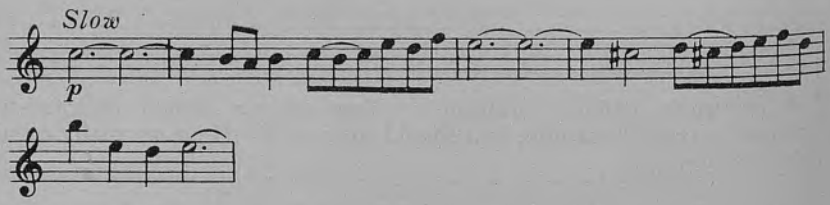

E

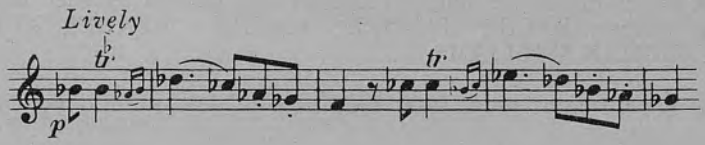

F

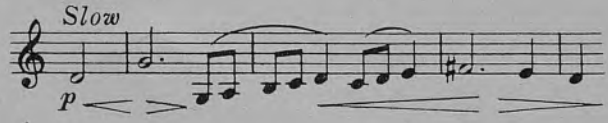

1959
SCOTTISH LEAVING CERTIFICATE EXAMINATION

MUSIC

HIGHER GRADE—(FIRST PAPER)

Monday, 2nd March—1.30 P.M. to 3.30 P.M.

N.B.—Write in ink, clearly and legibly. Care must be taken to make the notation clear ; notes indistinctly placed will be regarded as wrong.

All the answers to this paper are to be written in the spaces provided in this examination paper, which must be given up with all sheets of manuscript music paper used for rough working attached to it.

In order to obtain a pass in the whole examination, candidates must satisfy the examiners in this paper.

The value attached to each question, or to each part of a question, is shown in brackets after the question.

Number of seat occupied at examination.

FILL THIS IN FIRST

Name of School .....

Name of Pupil .....

[TURN OVER

PAPER I

All candidates must answer THREE questions ; the question in Section I, ONE question from Section II, and ONE question from Section III.

SECTION I

1. Complete the following for S.A.T.B. throughout. Credit will be given for a pleasing completion of the melody. (28)

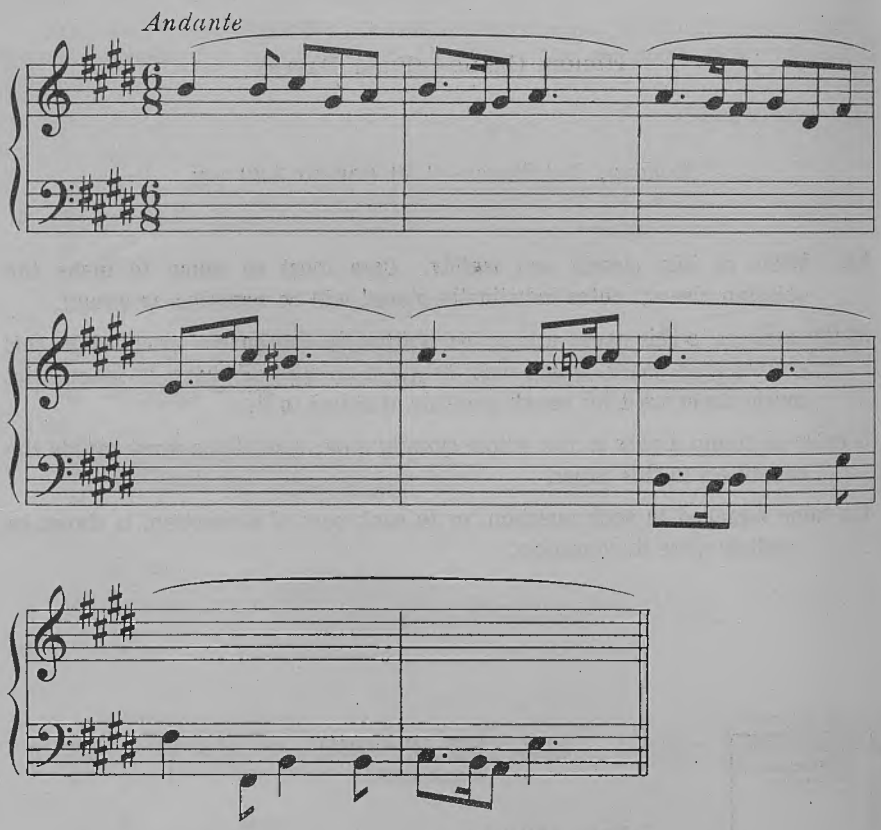

SECTION II

Answer ONE question only, in this section.

2. Add a simple bassoon part to the given part for oboe, to make an unaccompanied duet for the two instruments. The compass of the bassoon should be regarded as :—

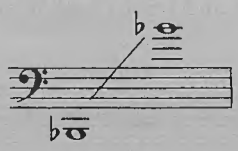

Indicate how the added part is to be performed by adding slur marks. Notes not slurred together will be " tongued " separately. If detached notes are to be very short add staccato marks. The bassoon should begin on the first beat of the first bar.

The following is suggested as an opening phrase for the bassoon. You may use it as it stands, or you may modify it, or you may compose your own opening.

(20)

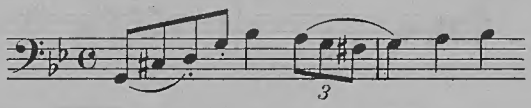

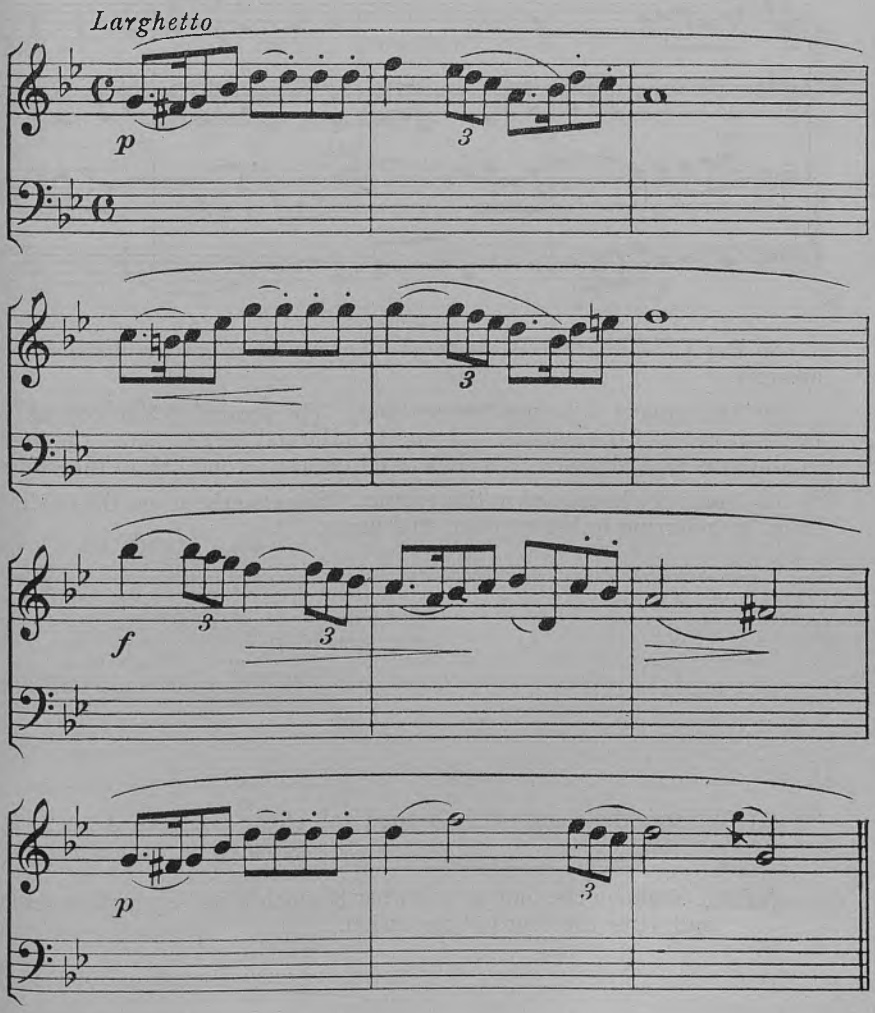

3. This extract is taken from the Fugue in D major, in book II of Bach's "48 Preludes and Fugues for the Well-tempered Clavichord". It is a fugue in four "voices". To make it easier to follow the voices have been given a stave each; the right hand would play the upper two staves, and the left hand the lower two. Read it over and try to hear it in your mind before answering the following questions.

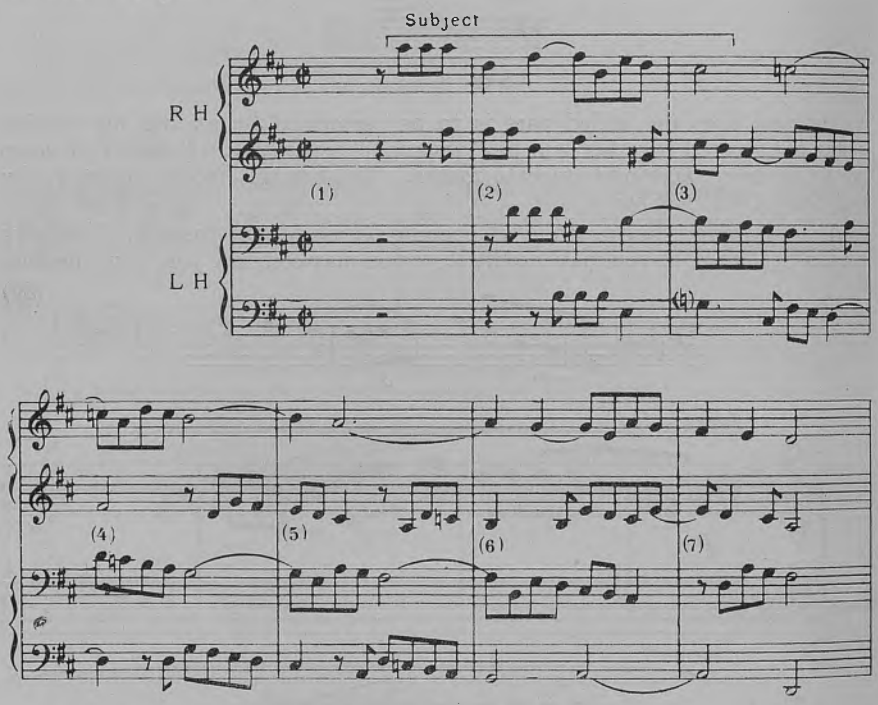

(*a*) Put ┌──────┐ above all other complete entries of the subject (or answer). (1)

(*b*) The subject falls into two sections. The second section consists of the last four notes of the subject. In bars 4 to the end, put √ above the beginning of all phrases, in all voices, which derive from the second half of the subject. (2)

(*c*) Name the keys used in this extract. Say exactly where the modulations occur by referring to bar-numbers and beats.

.....

.....

.....

.....

.....

..... (2)

(*d*) (i) Name the chord on the second half of the last beat of bar 2.

.....

(ii) Put X above the four notes in bar 3 which form its chord of resolution, and name the chord of resolution.

..... (2)

(*e*) In bar 6,

(i) describe the A and F sharp contained in the first chord :

.....

.....

(ii) name the chord on the second beat of the bar.

..... **(2)**

(*f*) Describe fully the chords used in bar 7.

.....

.....

.....

.....

.....

..... **(4)**

(*g*) Do you think this extract comes from the beginning, middle, or end of the fugue ? Give reasons for your answer.

.....

.....

.....

..... **(2)**

(*h*) Explain the following in as few words as possible :—

(i) " Well-tempered " .....

.....

..... **(1½)**

(ii) " Clavichord " .....

.....

..... **(1½)**

(iii) The significance of " 48 " .....

.....

..... **(1½)**

(iv) Calculate what number the fugue in D major would be in book II of " The 48 ". (Just give the number.) (½)

(Total marks = 20)

SECTION III

Answer ONE question only, in this Section.

4. Write a melody to suit the following stanza. The setting should be antiphonal, *i.e.* for a solo voice ; and a trio of voices singing in unison. Indicate the entries by putting SOLO or TRIO as necessary above the melody.

Harmonize four cadences in block harmony, and indicate modulations. Insert expression marks where necessary, and place at the beginning a musical term to indicate speed or style. Write each syllable of the words below the note or notes to which it is intended to be sung. Lines or phrases may be repeated if desired. (22)

" Seamen three ! What men be ye ?
Gotham's three wise men we be.
Whither in your bowl so free ?
To rake the moon from out the sea.
The bowl goes trim. The moon doth shine.
And our ballast is good wine.
And your ballast is good wine."

Peacock.

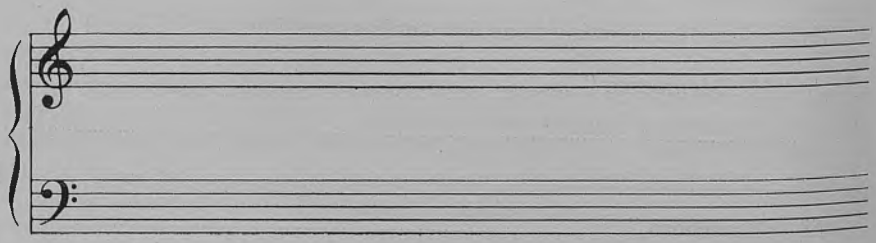

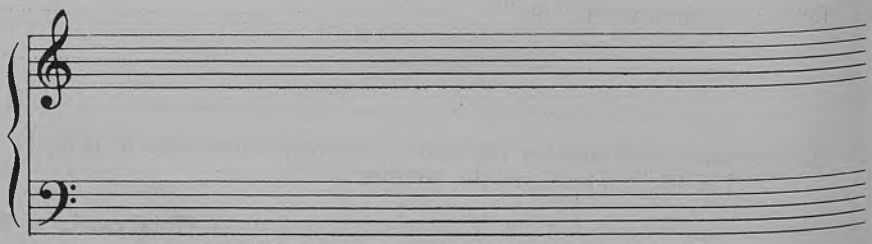

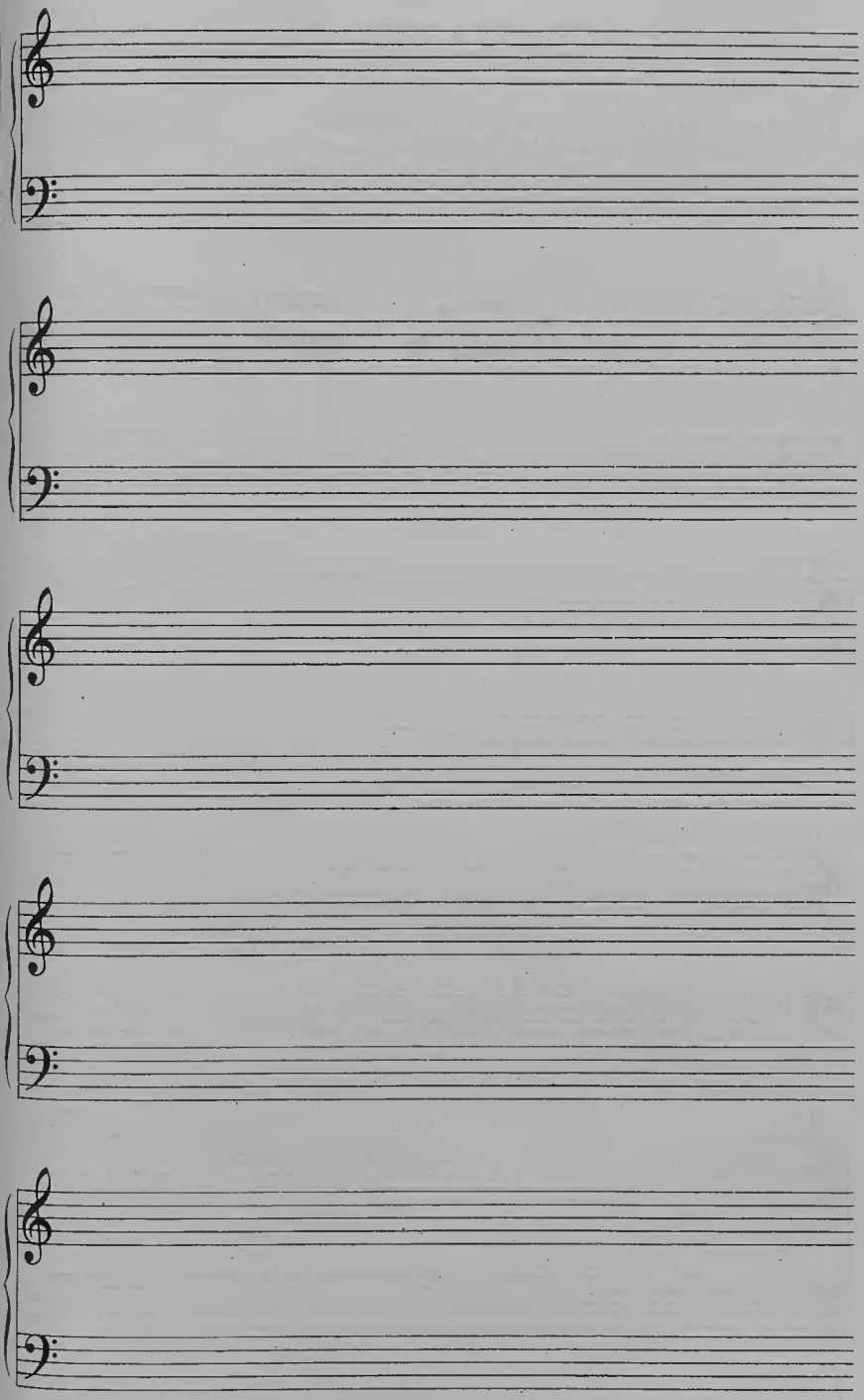

If extra staves are required, use those provided on page 10.)

5. Extend the given phrase into a complete melody of 16 bars. Modulate through the keys of G major, E minor, A minor, and F major, finishing in the key of C major.

Indicate the actual places where each modulation takes place by inserting the two chords which establish the new key. Add phrasing marks, and expression marks; use slurs and staccato marks to indicate details of performance. Add a musical term to indicate speed or style. (22)

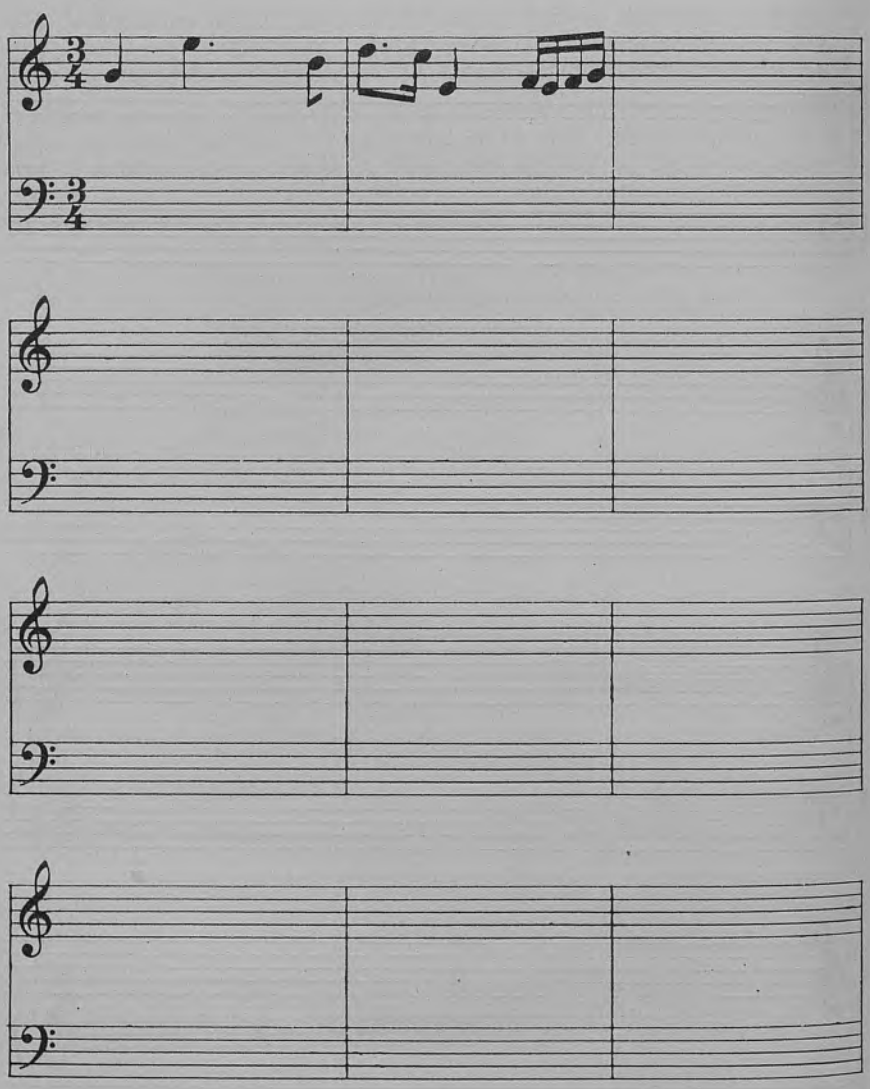

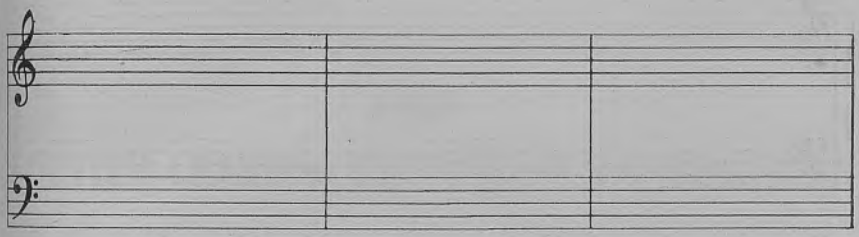

(If extra staves are required, use those provided on page 10.)

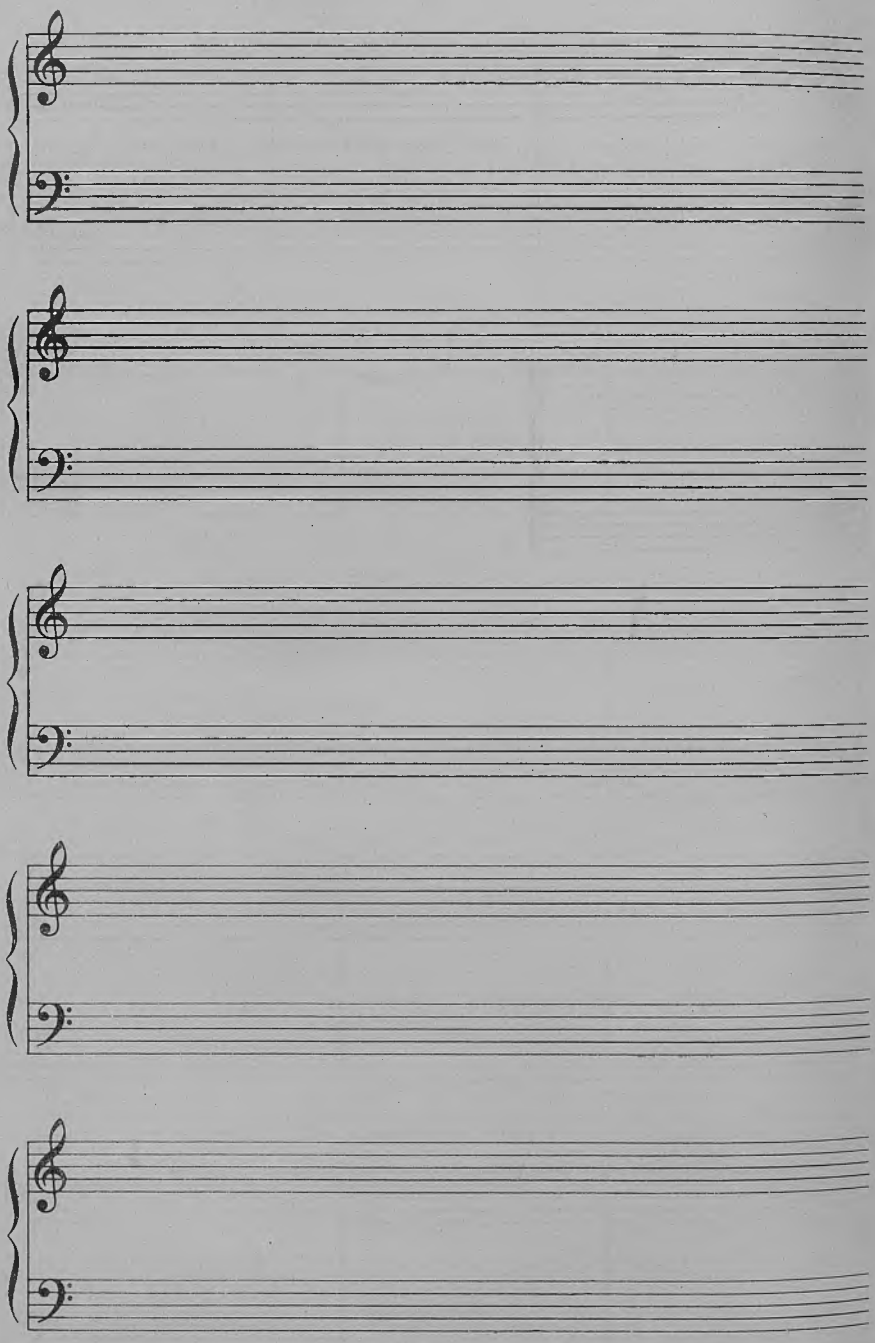

1959
SCOTTISH LEAVING CERTIFICATE EXAMINATION

MUSIC

HIGHER GRADE—(SECOND PAPER)

Monday, 2nd March—11.0 A.M. to 12 NOON.

N.B.—Write in ink. Marks will be deducted for bad spelling and bad punctuation, and for writing that is difficult to read.

All answers are to be written in the examination book provided.

The value attached to each question, or to each part of a question, is shown in brackets after the question.

[TURN OVER

PAPER II

Answer Question 4 and ONE other question.

(Themes printed on this paper must not be used for quotation.)

1. Describe briefly the music and music-making which would have been heard in England in the first quarter of the 17th century. Refer to the music which might have been heard at court, or in the great houses of the nobility and wealthy merchants ; in the houses of the common people and in the villages ; in the theatre ; and in the church. Describe the instruments which were in use and the kind of music played and sung, mentioning some of the great musicians of that time. Allude to some specific pieces of music by name, and quote in staff-notation two themes of about four bars each from any of the pieces mentioned. **(15)**

2. Outline the growth and development of the symphony from the beginning of the 18th century to the end of the 19th century. Name some composers whose work notably advanced and enhanced this art form, and refer to specific examples. Quote in staff-notation two themes of about four bars each from any of the symphonies mentioned. **(15)**

3. Vienna has for at least two hundred years been one of Europe's greatest musical centres. Amplify this statement, *e.g.* by naming some great composers who were born in, or associated with Vienna during that period, referring to their outstanding achievements ; by naming any specific forms of music which have sprung from, or been principally developed there ; by explaining terms like " Viennese Period ", " Viennese School " ; or by mentioning some famous bodies of musicians or individual performers who have brought fame to that city. Refer to some specific pieces of music and quote in staff-notation two themes of about four bars each from any of the examples named. **(15)**

4. (*a*) Identify **four** of the following excerpts from the list of pieces prescribed for study. Name the work, and the movement if it contains more than one, the composer, and the date of composition. **(6)**

(*b*) Write a short factual paragraph about the form and general characteristics (including the instruments used if it is scored for orchestra) of one of the works identified, or, in the case of a longer work, the particular movement identified **(not the whole work).** **(5)**

(*c*) Quote at least four bars of not more than two themes from the work or movement about which you have written. **(4)**

(Total marks = 15)

A *Moderate speed*

B *Slow* *p* *pp*

C *Quick* *p*

D *Rather slow* *pp*

E *Quick* *pp*

F *Rather slow* *f*

G *Slow* *p* *più p*

1959
SCOTTISH LEAVING CERTIFICATE EXAMINATION

ART

LOWER GRADE—(FIRST PAPER)—FIGURE COMPOSITION

Wednesday, 18th March—1.0 P.M. to 4.0 P.M.

Your figure composition must be done in colour, using water colour, gouache (body colour), poster or powder colour, but NOT oil colours or pastels. It should fill the sheet of paper with which you have been supplied, and should be painted on the side which has no printing. Due credit will be given to preliminary sketches which must be done on the sheet marked "Preliminary Sketching" and attached to the BACK of the finished painting.

100 marks are assigned to this paper.

Choose ONE of the following subjects.

1. In the Shoe Shop.
2. The Window Cleaners.
3. The Fish Market.
4. The Fire.

(C64257)

1959
SCOTTISH LEAVING CERTIFICATE EXAMINATION

ART

LOWER GRADE—(SECOND PAPER)—DESIGN

Friday, 20th March—9.15 A.M. to 11.45 A.M.

All rough work and preliminary sketches must be done on the paper marked "Preliminary Sketching" and attached to the BACK of the completed design. Tracing paper may be used in all questions, but this should be handed in SEPARATELY from your finished work. Colour work must be executed in water colour or gouache (body colour) or poster or powder colour.

Your design must be painted on the side of the paper which has no printing.

100 marks are assigned to this paper.

Answer ONE of the following questions.

1. Design in colour a repeating pattern suitable for material to be used in furnishing an airport lounge. The size of unit should be 5 inches by 4 inches (long side upright). Complete six repeats in colour.

2. Design in colour an embroidered oval linen tray cloth, size 18 inches by 12 inches. Half the design should be drawn full size and a small sketch added to show the complete design.

3. Design in colour the cover of a pamphlet, size 9 inches by 6 inches (long side upright), for **one** of the following :—

(*a*) Bulbs ;
(*b*) Wild Animals ;
(*c*) Antiques.

4. On the sheet of paper provided, design a panel of script using the following verse.

"Sometimes a troop of damsels glad,
An abbot on an ambling pad,
Sometimes a curly shepherd-lad,
Or long-hair'd page in crimson clad,
Goes by to tower'd Camelot."

(C64258)

1959
SCOTTISH LEAVING CERTIFICATE EXAMINATION

ART

LOWER GRADE—(THIRD PAPER)—REPRESENTATIONAL DRAWING AND PAINTING

Friday, 20th March—1.0 P.M. to 4.0 P.M.

100 marks are assigned to this paper.

Choose ONE of the following alternatives.

(a) *Still-Life Group*

On the sheet of paper supplied to you paint the group set before you. The painting should fill the paper. Only water colour or gouache (body colour) may be used.

Or

(b) *Plant Form*

(1) On the first sheet of paper make a detailed study in **pencil** of the spray of leaves provided.

(2) On the second sheet of paper make a study in colour from the flower or potted plant provided. Only water colour or gouache (body colour) may be used. Do not draw the container which holds the plant.

(C64259)

1959
SCOTTISH LEAVING CERTIFICATE EXAMINATION

ART

LOWER GRADE—(FOURTH PAPER)—DETAILED STUDY FROM LIFE

Friday, 20th March—1.0 P.M. to 3.30 P.M.

100 marks are assigned to this paper.

On the sheet of paper supplied to you make a detailed study **either** of the full figure **or** of the head of the model posed for you. You may use pencil, pen and ink, gouache (body colour) or water colour.

If you draw from the full figure, the chair in which the model is posed should be indicated but not drawn in detail.

(C64260)

1959
SCOTTISH LEAVING CERTIFICATE EXAMINATION

ART

Higher Grade—(First Paper)—Figure Composition

Wednesday, 18th March—1.0 p.m. to 4.0 p.m.

Your figure composition must be done in colour, using water colour, gouache (body colour), poster or powder colour, but NOT oil colours or pastels. It should fill the sheet of paper with which you have been supplied, and should be painted on the side which has no printing. Due credit will be given to preliminary sketches which must be done on the sheet marked "Preliminary Sketching" and attached to the BACK of the finished painting.

100 marks are assigned to this paper.

Choose ONE of the following subjects.

1. At the Hairdresser's.
2. Beach Concert Party.
3. Drowsiness.
4. Fruit and Vegetable Stall.

(C64424)

1959

SCOTTISH LEAVING CERTIFICATE EXAMINATION

ART

HIGHER GRADE—(SECOND PAPER)—DESIGN

Friday, 20th March—9.15 A.M. to 11.45 A.M.

All rough work and preliminary sketches must be done on the paper marked "Preliminary Sketching" and attached to the BACK of the completed design. Tracing paper may be used in all questions, but this should be handed in SEPARATELY from your finished work. Colour work must be executed in water colour or gouache (body colour) or poster or powder colour. Your design must be painted on the side of the paper which has no printing.

100 marks are assigned to this paper.

Answer ONE of the following questions.

1. Design in colour an embroidered panel, size 12 inches by 8 inches (long side upright) on the theme "Aviary". Your design should show a variety of stitches and be suitable for working on fine material.

2. Design in colour a pattern suitable for material to be used in making a dinner dress. The pattern should suggest the theme "constellation", and should be based on narrow vertical stripes.

Complete as much of the pattern as time allows.

3. Design in colour a paper book jacket for the book "War and Peace" by Leo Tolstoy. The book measures 10 inches by 7½ inches, long side upright, and has a 2-inch spine. The title and author's name should be included in your design.

4. Within a rectangle, size 12 inches by 7 inches, draw and paint in Roman capitals the following door plate :—

Scottish Tourist Board

1959
SCOTTISH LEAVING CERTIFICATE EXAMINATION

ART

HIGHER GRADE—(THIRD PAPER)—
REPRESENTATIONAL DRAWING AND PAINTING

Friday, 20th March—1.0 P.M. to 4.0 P.M.

100 marks are assigned to this paper.

Still-Life Group

On the sheet of paper supplied to you paint the group set before you. The painting should fill the paper. Only water colour or gouache (body colour) may be used.

(C64262)

1959
SCOTTISH LEAVING CERTIFICATE EXAMINATION

ART

HIGHER GRADE—(FOURTH PAPER)—DETAILED STUDY FROM LIFE

Friday, 20th March—1.0 P.M. to 3.30 P.M.

100 marks are assigned to this paper.

On the sheet of paper supplied to you make a detailed study **either** of the full figure **or** of the head of the model posed for you. You may use pencil, pen and ink, gouache (body colour) or water colour.

If you draw from the full figure, the chair in which the model is posed should be indicated but not drawn in detail.

(C64263)

1959
SCOTTISH LEAVING CERTIFICATE EXAMINATION

ART

HIGHER GRADE—(FIFTH PAPER)

Wednesday, 18th March—9.15 A.M. to 11.30 A.M. (2 hours + 15 minutes break)

SECTION 1—HISTORY AND APPRECIATION OF PAINTING AND ARCHITECTURE—(9.15 A.M. to 10.15 A.M.)

TWO questions should be attempted, No. 1, and any one other.
25 marks are assigned to each question.

1. **Either**

Answer **briefly** any **five** of the following :—

(*a*) Who painted **either** (i) " The Shrimp Girl " **or** (ii) " View of Delft " ? Give a short description sufficient to identify one of these pictures.

(*b*) Name **one** artist from each of the following " schools " of painting :— Umbrian, Norwich, French Impressionist, Early Flemish, Surrealist.

(*c*) For each of the following mediums give the name of **one** artist who is particularly associated with it :—
Egg Tempera, Fresco, Water-colour, Engraving, Pastel.

(*d*) What type of subject did the following artists usually paint ? Wilkie, Raeburn, McTaggart, Hornel, McCulloch.

(*e*) Name five artists of the Venetian school, placing them in chronological order.

(*f*) Name three **living** artists of international reputation and describe very briefly the characteristics of the work of **one** of them.

Or

Answer **briefly** any **five** of the following :—

(*g*) Name the types of building in which the following are found :— Caryatids, fan vaulting, wheel window, metopes, lotus bud columns.

(*h*) Sketch the front of a Georgian house and label three features characteristic of this period.

(*j*) Draw five simple diagrams to show stages in the development from post and lintel construction to the Perpendicular Gothic arch.

(*k*) Sketch, name and date the front view of a rock-hewn temple.

(*l*) Name a building in Scotland by Robert Adam and give four characteristic features of its interior decoration.

(*m*) For what purposes were the following built ? The Pont du Gard at Nîmes, the Pantheon, Trajan's Column, the Colosseum, the Basilica of Constantine.

2. Discuss the effect of patronage (e.g. of the church, the aristocracy, the merchant class) on painting and illustrate changing trends by reference to Italian, Dutch and French masters.

3. Some artists express themselves more readily as draughtsmen than as colourists, whereas the reverse is true of others. Amplify this statement by reference to artists whose work illustrates this point.

4. What were the aims of French Impressionist painting? How did they differ from those of David and Ingres and in what respects did the Post-Impressionists depart from Impressionist aims?

5. At one time, painting in England owed much to foreign artists who had settled there. Discuss their influence and the emergence of more characteristically English elements as found in the work of Hogarth, Constable and others.

6. Describe briefly the evolution of the buttress and of the vault from the points of view of function and decorative treatment. Illustrate your answer with sketches.

7. Describe, and illustrate with sketches, the influence of Renaissance architecture on the work of British architects of the seventeenth and eighteenth centuries.

8. Compare the constructional and decorative features of two churches, one built in the Renaissance style and the other in the Romanesque. Illustrate your answer with sketches.

9. Describe, and illustrate with sketches, the main ways in which Greek temple architecture differs from Egyptian and give reasons for the changes.

SECTION 2—DRAWING FROM LIFE—10.30 A.M. to 11.30 A.M.

50 marks are assigned to this section

On the single sheet of cartridge paper provided make **two** drawings, one of each model. Each drawing should occupy approximately half the sheet of cartridge paper provided. Including any rest periods (3 minutes), each pose will be of 25 minutes' duration, and 10 minutes will be allowed for the posing of the second model.

N.B.—A finished drawing of each model is not desired. Any object the sole function of which is to enable the model to maintain the pose should be indicated but not drawn in detail.

1959
SCOTTISH LEAVING CERTIFICATE EXAMINATION

BOOK-KEEPING

LOWER GRADE

Wednesday, 11th March—9.15 A.M. to 11.15 A.M.

Marks will be deducted for careless or badly arranged work.

The value attached to each question is shown in brackets after the question.

1. You are handed an agreed trial balance, as extracted from the books of account, and instructed to prepare the final accounts of a sole trader. Detail, giving reasons in each instance, five different items of information which you would still require in order to carry out your task correctly. **(15)**

2. On 1st October, 1958, J. Jones, who owed us £82 10*s*., accepted a bill for £80 at 60 days in full settlement of his indebtedness. On 3rd October, 1958, we endorsed this bill to B. Brown, to whom we owed £125, and gave him a cheque for the balance. When J. Jones' bill became due, it was dishonoured by non-payment and, in accordance with B. Brown's request, we gave him our cheque for the amount of the bill, together with noting charges, £1 5*s*. On 6th December, 1958, J. Jones sent us a cheque for £41 5*s*., being half the amount of the original bill and the noting charges, and accepted a bill at one month for the balance owing, together with interest amounting to £2 15*s*. This bill was met when it fell due.

Record the above transactions in the journal, cash book and bills book and make up the ledger accounts of J. Jones and B. Brown *only*. **(25)**

3. On 28th February, 1959, the bank account as shown in your cash book had a balance of £85. When you received your bank statement made up to 28th February, 1959, you found (*a*) that cheques to the value of £210 had not been presented for payment, (*b*) that a sum of £98, which had been placed in the bank's night safe on 28th February, had not been credited until the following day, (*c*) that dividends on investments, amounting to £64, which had been credited to your bank account, had not been entered in your cash book, (*d*) that bank charges, amounting to £2 8*s*. 6*d*., had been debited to your account but had not been entered in your cash book, and (*e*) that no entry had been made in the cash book in respect of the dishonour by non-payment of a debtor's cheque for £45.

From the above information prepare a detailed statement to bring out the balance of your account as shown in the bank statement. **(16)**

[TURN OVER

4. On 1st February, 1959, D. Kemp had the following assets and liabilities :— cash in hand, £20 ; cash at bank, £85 ; stock of goods, £540 ; office furniture, £178 ; motor vehicles, £530 ; buildings, £2,200 ; sundry debtors (R. Reid, £66 ; D. Barr, £43 ; S. Collins, £59) £168 ; sundry creditors (T. Walsh, £177 ; W. Mackay, £149) £326 ; bill receivable (No. 63, on D. Barr, due 17th February, 1959) £85 ; bill payable (No. 28, to W. Mason, due 24th February, 1959) £250 ; bank deposit account, £850 ; provision for bad debts, £20.

The balance represents D. Kemp's capital.

On 2nd February, 1959, he agreed to enter into partnership with T. Swift on the following terms :—

(*a*) the goodwill of D. Kemp's business was to be valued at £640 ;

(*b*) the book value of the buildings was to be raised to £3,000 ;

(*c*) T. Swift was to bring in as his share of the firm's capital goods valued at £680, a motor van valued at £450, and £170 in cash. The cash was duly paid into the firm's current account at the bank.

Open the necessary books of account and record therein the above and the following transactions. Bills books are to be kept. Balance off the bank cash book. Do *not* post any transactions to the ledger.

All payments were made by cheque, unless otherwise stated, and all receipts were paid into the bank on the days they were received.

1959

Feb. 2. Purchased on credit from T. Walsh goods value £95, less 15 per cent. trade discount.

,, 3. Paid garage account for petrol and oil £15 8*s*., repairs to vehicles £9 16*s*., and two new tyres £17 9*s*.

,, 6. Sold to R. Reid on credit goods value £47.

,, 9. Agreed to buy adjoining building at a price of £950 ; paid by cheque purchase price, together with legal expenses amounting to £35.

,, 10. Instructed bank to transfer £600 from the deposit account to the firm's current account.

,, 12. Returned to T. Walsh goods value £12 gross and accepted his bill for £200 at 30 days. Sent him cheque for £45 in full settlement of balance owing.

,, 14. Purchased on credit from Brown's Garage, Ltd., new van costing £630, and gave in part payment old van value £185.

,, 16. Sent R. Reid credit note for £3 in respect of goods damaged in transit and received his cheque for the total amount owing, less 2½ per cent. cash discount.

,, 16. Bought of W. Mackay goods value £68, less 25 per cent. trade discount.

,, 17. Bill No. 63, due to-day, duly met.

,, 18. Sold to S. Collins goods value £75, less 10 per cent. trade discount.

,, 19. D. Kemp took for his own use goods value £32.

1959

Feb. 21. Received from W. Mackay a letter stating that the correct rate of trade discount on the goods purchased on 16th February was 15 per cent. and enclosing a debit note for the undercharge.

" 24. Duly met at bank bill No. 28.

" 25. Received from T. Evans, whose debt had previously been written off as bad, cheque for £22 in settlement.

" 26. S. Collins returned goods value £10 gross and accepted our bill for £114 at one month in full settlement of his indebtedness.

" 27. Drew from bank for office cash, £90.

" 28. Paid wages in cash, £98, less National Insurance, £3 14*s.*, and Income Tax, £4 10*s.*

" 28. Cash sales for month, £685.

" 28. Paid T. Swift his salary for month, £75. **(44)**

S

Th

pa
ex

fin
Re
(c)

ac
31
th

cre

fol
ret
cre
de
pa
ca

1959

SCOTTISH LEAVING CERTIFICATE EXAMINATION

BOOK-KEEPING

HIGHER GRADE

Wednesday, 11th March—9.15 A.M. to 11.15 A.M.

The value attached to each question is shown in brackets after the question. Marks will be deducted for careless or badly arranged work.

1. What methods are there of marshalling the assets and liabilities of a partnership in a balance sheet? Illustrate your answer by *pro-forma* examples. **(16)**

2. Describe the circumstances under which the most appropriate form of final record for the current transactions of an undertaking would be (*a*) a Receipts and Payments Account, (*b*) an Income and Expenditure Account, and (*c*) a Profit and Loss Account. **(20)**

3. From the particulars given below prepare statements, in the form of accounts, to show (*a*) the total amount owing by sundry debtors on 31st December, 1958, and (*b*) the total amount owed to sundry creditors on the same date.

On 1st July, 1958, sundry debtors owed us £9,785, and we owed sundry creditors £4,284.

Transactions for the half-year ended 31st December, 1958, were as follows:—sales, £31,309; purchases, £17,483; sales returns, £2,946; purchases returns, £1,684; cash receipts from debtors, £23,658; cash payments to creditors, £13,744; discounts allowed, £1,045; discounts received, £382; bad debts written off, £978; bills receivable accepted by debtors, £3,463; bills payable drawn by creditors, £1,045; bills receivable dishonoured, £454; carriage and other expenses charged to debtors, £98. **(20)**

4. On 1st January, 1959, the balances in the books of J. Flett and B. Forbes, who are equal partners, were as follows :—cash in hand, £35 ; bank overdraft, £165 ; stock of goods, £1,980 ; motor vehicles, £1,076 ; furniture and fittings, £104 ; investments, £890 ; sundry debtors (W. Howie, £73 ; S. Runcie, £68 ; D. Miller, £56), £197 ; sundry creditor, T. Owens, £108 ; Moosa Ali, Beira, (cr.), £187 ; loan from T. Giles, £1,200 ; investments reserve, £190 ; consignment to Moosa Ali, Beira, (dr.), £232 ; insurance paid in advance, £18 ; current account, Flett, (cr.), £265 ; current account, Forbes, (dr.), £70 ; bill receivable (No. 28, on S. Runcie, due 14th January, 1959), £76 ; bill payable (No. 24, to T. Owens, due 26th January, 1959), £125.

The balance represents the capitals of the partners which are fixed and, as stated above, are held equally.

On 2nd January, 1959, they agreed to admit T. Giles as a partner on the following terms :—

(*a*) The amount of his loan should be regarded as his fixed capital.

(*b*) He should pay, as a premium for his share of the goodwill of the firm, a sum of £400, which was to remain in the business. The money was duly paid into the firm's bank account.

(*c*) The value of the stock of goods was to be written down by 10 per cent.

(*d*) Giles was to receive a salary of £90 per month for his services to the firm.

Open the necessary books of account for the partnership and record therein the above and the following transactions. Bills books should be kept. Balance off the bank cash book. Do **not** post any transactions to the ledger.

All payments were made by cheque, unless otherwise stated, and all receipts were duly paid into the bank on the days they were received.

1959

Jan. 2. Sold to W. Howie goods value £75, less 20 per cent. trade discount.

,, 6. S. Runcie paid on account £28.

,, 6. Agreed to purchase from J. Ramsay, who was giving up business, the following assets :—stock of goods, £270 ; motor van, £310 ; furniture and fittings, £90. Gave him cheque in settlement.

,, 9. Sold for £660 the total holding of investments.

,, 10. Made W. Howie an allowance of £5 on goods sold on 2nd January and received his acceptance for £125 at sixty days in full settlement of his indebtedness.

,, 12. Bought of T. Owens goods value £180, less 15 per cent. trade discount.

,, 14. Bill No. 28, due to-day, dishonoured by non-payment : paid noting charges in cash, £1 5*s*.

,, 15. Motor van valued at £300 and goods valued at £110 completely destroyed by fire after an accident : lodged with Empire Insurance Company claim for amount lost : company admitted liability for only 90 per cent. of amount claimed.

,, 16. Discounted at bank W. Howie's bill : amount received £123 12*s*.

,, 18. D. Miller sent cheque for amount owing, less 2½ per cent cash discount.

1959

Jan. 20. Received from Moosa Ali, Beira, an account sales showing that the consignment had realised £410 gross, that landing and other charges amounted to £42, and that selling commission was 3 per cent. of the gross proceeds. A bank draft for the balance owing by him was enclosed.

" 22. S. Runcie is insolvent: agreed to accept a composition of 12*s.* in the £, payable as to one half in cash and one half by bill of exchange at one month: cheque and acceptance duly received.

" 26. Duly met at bank bill No. 24, due to-day.

" 28. Returned to T. Owens goods value £18 gross and accepted his bill for £240 at one month in full settlement of amount owing.

" 29. Bank charged interest on overdraft, £3 10*s.*, and fees for keeping account, £5 9*s.* 6*d.*

" 30. Drew from bank for office cash, £110.

" 31. Forbes drew by cheque for his own use, £50.

" 31. Paid Giles his salary for month.

" 31. Paid in cash wages for month, £127, less National Insurance, £6 15*s.*, and Income Tax, £11 4*s.*

" 31. Cash sales for month, £683. **(44)**

S

Ca

Be

Fo

Al

Al

Ma

Th

in

£5

co

ne

th

be

th

he

pla

1959
SCOTTISH LEAVING CERTIFICATE EXAMINATION

COMMERCIAL ARITHMETIC

HIGHER GRADE

Tuesday, 17th March—9.15 A.M. to 10.45 A.M.

Candidates should attempt SIX questions, viz., the two questions in Section A and any four questions taken from Section B.

Before attempting to answer any question, candidates should read the whole of it very carefully, since time is often lost through misapprehension as to what is really required.

Four-place mathematical tables are provided.

All the working must be shown in its proper position in the answer and, when necessary, the different steps of the calculation should be shortly indicated in words.

Algebraical symbols may be used, if properly explained.

Marks will be deducted for careless or badly arranged work.

The value attached to each question is shown in brackets after the question.

Section A

The two questions in this Section should be attempted.

1 A shipment of tea, weighing in all 1 ton 3 cwt. 2 qr. 8 lb., is contained in 27 chests each measuring 24 in. by 20 in. by 20 in. If freight by sea costs £5 16*s*. 8*d*. per "ton" of 40 cubic feet, (*a*) what is the total freight for the consignment, and (*b*) what is the cost of transport per lb. (correct to the nearest hundredth of a penny)? **(16)**

2. On 3rd November, 1958, a banker purchased at a rate of Fl.10.67½ to the £ a bill the face value of which was 56,043.75 Dutch florins. The bill had been drawn on 12th October, 1958, at three months. When the bill matured, the sight rate of exchange was Fl. 10.55 to the £. (*a*) How much sterling did he gain on his purchase? (*b*) What rate of interest (correct to two decimal places) did he secure on his investment? **(20)**

[TURN OVER

Section B

FOUR questions should be attempted from this Section.

3. On 10th April, 1958, a financier lent to a dealer a sum of £775 at interest at the rate of 9 per cent. per annum. On 15th November, 1958, the dealer went bankrupt and the financier was paid a dividend in respect of loan and interest at the rate of 13/6 in the £. How much did he actually receive? **(16)**

4. A man invested £3,790 in a 6 per cent. stock from which he received an annual income of £138 after income tax at the rate of 8*s*. 6*d*. in the £ had been deducted. At what price did he buy the stock? (Brokerage = $\frac{1}{4}$ per cent.). **(16)**

5. What sum must be paid for an annuity of £260 per annum which is to run for 15 years, if the first payment is to be made one year after the date of purchase and if compound interest is reckoned at $4\frac{1}{2}$ per cent. per annum? **(16)**

6. A firm which produced a powder at a cost of 4*s*. 9*d*. per lb. packed its product in tins, each containing 8 oz. of powder. After allowing 20 per cent. trade discount and 5 per cent. cash discount, it made a profit of 25 per cent. on net selling price. The cost of production has now risen by 20 per cent. and the firm has reduced the quantity in each tin by $\frac{1}{2}$ oz. and increased the list price by 10 per cent.: the rates of discount have remained unaltered. What is the new rate of profit on net selling price, correct to one place of decimals? **(16)**

7. The shareholders in a small company have received two offers as follows:—(*a*) one from company Y of four $6\frac{1}{2}$ per cent. Preference shares of £1 each and five Ordinary shares of 10*s*. each for every nine shares they own, and (*b*) one from company Z of £6 in 5 per cent. Debenture stock and fifteen Ordinary shares of 2*s*. each for every twelve shares they hold. It is anticipated that on its Ordinary shares company Y will pay a dividend of 10 per cent. per annum and company Z one of 25 per cent. per annum. Which offer would give the better yield and by how much per hundred shares? **(16)**

8. (*a*) A running track, six metres wide, surrounds an arena which is in the shape of a rectangle with semi-circular ends. The dimensions of the rectangle are 135 metres by 40 metres. Calculate the area of the track, correct to the nearest square metre.

(*b*) If a competitor runs round the track at a distance of half a metre from its inner side, how far has he covered in one circuit of the track? **(16)**

$$(\pi = 3 \cdot 14)$$

1959

SCOTTISH LEAVING CERTIFICATE EXAMINATION

COMMERCIAL SUBJECTS—SHORTHAND

Thursday, 19th March—9.30 A.M. to 11.30 A.M.

This paper must not be seen by any candidate

Instructions to the Teacher

1. The twenty minutes immediately preceding the beginning of the tests should be used to make yourself thoroughly familiar with the passages to be read.

2. When so instructed by the supervising officer, read to the candidates the "Instructions to Candidates" given below.

3. The short practice passage of approximately eighty words which is printed on page 3 is to be used for practice reading to the candidates. The passage may be read once only.

4. Then read the passages to the candidates clearly and naturally. Punctuation will be indicated by appropriate pauses and the inflection of the voice, and will in no case be dictated.

5. Tests should be read in ascending order from the lowest to the highest speed required.

6. An interval of two minutes is to be allowed between the reading of the passages.

7. Phrasing according to any particular system of shorthand is not permitted.

8. Tests, or parts of tests, must not, **under any circumstances,** be read more than once.

9. The reading of each passage should occupy exactly five minutes.

10. Figures should be read in full, e.g., £164,300 (one hundred and sixty-four thousand, three hundred pounds).

11. Errors made in reading will be noted by the supervising officer and taken into account by the examiners. Corrections must not be made by the teacher after the passage has been read.

12. No test paper may be taken from the room by you or by any other person until the conclusion of the examination.

13. When all the passages required have been read you will immediately withdraw from the examination room.

Instructions to Candidates

The procedure will be as follows :—

1. A short practice passage will be read. This must not be transcribed. The shorthand notes must be handed in at the end of the examination.

2. Tests will be read in ascending order from the lowest to the highest speed required.

3. An interval of two minutes will be allowed between the reading of the passages.

4. The shorthand notes may be taken with either pen or pencil, but transcripts must be written in ink.

5. You may take down the passages dictated at more than one speed, but you may submit a transcription of only one passage.

6. On no account may alterations be made to the original shorthand notes. Any alterations which you wish to make should be indicated by a circle round the wrong outline or phrase and the correct one written above.

7. Candidates on the higher grade must not take down passages read at speeds lower than eighty words per minute.

8. You may not ask for the repetition of any word or phrase.

9. All writing during subsequent readings, as well as in the intervals between readings, is strictly forbidden.

10. You will be told by the supervising officer when transcription may be commenced.

11. The shorthand notes of the passage transcribed should be attached to the transcript and should be handed to the supervising officer, together with all other shorthand notes made by you.

SHORTHAND

Practice Passage for Dictation

The passage may be read **once only** at an appropriate speed. Candidates should not make a transcription of the passage, but must hand in their shorthand notes at the close of the examination.

The oblique lines, / , mark the divisions into sections of ten words each. The reader should not make a pause when they occur, unless the sense requires it.

You will have observed that the Profit and Loss Account / for this year shows a reduction compared with last year. / This is not unexpected as the trend of business for / the past two years has been definitely downwards. It is / to be hoped that activity will begin to improve in / the near future. Your company, like many others, is able / to carry on with reduced profits for a considerable period, / but we are all much happier when the wheels of / industry are turning briskly.

Sixty Words per Minute

(Fifty minutes allowed for transcription)

The oblique lines, / , mark the division of time, but the reader must not make a pause when they occur, unless the sense requires it. The double lines, / / , mark the completion of each minute.

Dear Sir,

¼ In reply to your letter of yesterday's date I am permitted to send /
you a few extracts from the statement which the Chairman will submit
½ to the Annual / General Meeting. This statement accompanies the report
¾ and accounts for the year ended 31st / December, 1958.

1 At this meeting we propose to elect our secretary to the / / board.
¼ In the last few years as a result of the growth of our business / the
responsibility which he has had to carry has increased considerably. He
½ has carried the / heavy burden easily and efficiently and during his service
¾ with us he has earned our / highest respect. We have no doubt, therefore,
2 that you will welcome the proposal to make / / him a member of the board.

¼ During the past year our profits rose to another / record figure. You
½ will see from the Profit and Loss Account that the gross profit / of
¾ the group rose from £693,000 to / £740,000. The figures after tax are
3 £305,000 / / and £342,000.

¼ During the year we sold a large / amount of our investments with the
½ result that our cash at the end of the / year had increased considerably.
¾ We were able to invest a large amount on very favourable / terms during
4 the closing months of last year and the early months of this year / / and
as a result we now have more freedom to decide our future course
¼ of / action.

½ I am sure you will wish to join the members of the Board in / thanking
¾ our managing director and his staff at our head office and at our branch /
offices most sincerely for their loyal work and co-operation in 1958.

5 Yours faithfully, / /

Seventy Words per Minute

(Fifty minutes allowed for transcription)

The oblique lines, / , mark the division of time, but the reader must not make a pause when they occur, unless the sense requires it. The double lines, / / , mark the completion of each minute.

At the Annual General Meeting of Jack & Company, Limited, which was held at the registered office / of the company, 230 High Street, Manchester, on 20th May, 1958, the Chairman / said :

I should like to follow the custom I have followed at previous Annual General Meetings and / give you an account of the company's progress during the first quarter of the financial year.

Our total / / turnover for thc first eleven weeks of the year is up by $7\frac{1}{2}$ per / cent. on the corresponding period of last year, and wc consider this is very satisfactory. The new machine / which was introduced with great success on the home market last October has now been sold in / most markets abroad, and its reception has been highly satisfactory. The full benefit of this new product has / / not yet been reflected in the overseas trading results but we expect to benefit greatly in due / course.

The situation at home is still most difficult because of the effects of purchase tax and credit / restrictions and it is hoped that the recent reduction of 1 per cent. in the bank rate / is just the beginning of a more general reduction of the burdens industry has had to bear. If / / we are to compete successfully abroad we must have a much freer home market to act as / a base for our overseas operations. I look forward to the next budget in the hope that some / further relief will be given.

Turning to this year's results, we are satisfied with our progress during / this first quarter and we hope that this progress will be maintained for the remainder of the year, / / but because of the general economic difficulties throughout the world it is hard to make any definite / forecast.

The report and accounts were adopted and approval was given to the payment of a final dividend / of 1*s*. 6*d*. per 5*s*. share, less income tax, making with the interim dividend already / paid a final dividend for the year of 2*s*. 6*d*. per fully paid share, less income tax. / /

Eighty Words per Minute

(Sixty-five minutes allowed for transcription)

The oblique lines, / , mark the division of time, but the reader must not make a pause when they occur, unless the sense requires it. The double lines, / / , mark the completion of each minute.

The forty-ninth Annual General Meeting of the company was held
¼ on May 21st in London. The Chairman presided. /

The following is an extract from his statement.

½ The year 1958 has been a difficult one for your / company in many
ways and in particular it has seen a steady and almost continuous fall in
¾ most commodity prices. / The extent of this fall in the prices of many
1 of the raw materials which we process has in most / / cases been very
substantial.

It is against this background that the results of our seed-crushing
¼ activities must be judged, / and it is satisfactory to note that these were
½ actually more profitable in 1958 than in the previous / year. Our
subsidiary company, however, met severe competition and a reduction in
¾ demand which resulted in much lower profits from / that section of our
activities.

2 The gross trading profit of the group amounted to £365,000, / / a
decrease of £76,000 compared with the previous year.

¼ We have already paid an interim dividend / of threepence per share
and now recommend a final payment of ninepence, making a dividend of
½ one shilling / per share, less tax. This is at the same rate as for the
previous year.

¾ We improved the position of / our current assets by the issue of half
3 a million Debenture Stock in 1958. Since December 31st, / / 1958, our
position has again improved as lower prices for raw materials are reflected
¼ in the value of / stocks on hand, and we expect some further improvement.

½ Last year I pointed out that we had almost completed our / programme
of improving and extending one of our mills. It should be borne in mind,
¾ however, that in the manufacture / of technical oils new methods are
being constantly developed.

4 We are passing through a difficult period and at this early / / stage
it is not possible to anticipate what the rest of the year may bring. It is,
¼ however, certain that / the long period of increasing demand and easy
½ profits is now over and that we are in a period of / intense competition.
In such circumstances we can take heart from the fact that we have a
¾ very modern plant and / that in our managing director and his staff we
5 have the benefit of a great fund of energy and experience. / /

Ninety Words per Minute

(Sixty-five minutes allowed for transcription)

The oblique lines, / , mark the division of time, but the reader must not make a pause when they occur, unless the sense requires it. The double lines, / / , mark the completion of each minute.

The twentieth Annual General Meeting of the company will be held on June 8th in London. The following is an extract from / the statement by the Chairman which has been circulated with the report and accounts.

The drop in profits from £751,000 / to £673,000 should not be entirely unexpected, for in my statement last year / I said that trade conditions were not easy and that while I was not depressed about the long-term future of the paper / / trade, nevertheless we were entering a period when production was likely to exceed consumption. Such a situation makes business highly competitive.

Your / Directors are not resigned to this situation. It is our responsibility to do all we can to increase demand for our products and / to get the largest share possible of all business that is being placed and we continually try to do so. New outlets / for paper are often under examination with a view to increasing the range of products which we sell. Two years ago we decided / / on a national advertising campaign in order to bring home to the public at all levels the important part played by your / company in the distribution of paper products. We are also constantly taking steps to increase our own efficiency and reduce costs but all / the time we find that expenses largely outside our control continue to rise and thus reduce the net profit.

In the difficult / conditions of 1958 it is, therefore, encouraging that we were able to achieve an increase in our turnover which rose from / / £22 million to £23 million. This increase in business was spread evenly over most of the various sections / and subsidiaries of the organisation ; in fact in only three units was there a decrease in turnover and in each of these the / decrease was only slight. This reflects a healthy position and has enabled us to meet to some extent the increased cost of / maintaining our organisation at a proper standard of efficiency in the face of constantly rising prices.

In spite of this we cannot escape / / from the fact that wherever one goes in the world to-day it is obvious that there is a surplus of pulp and / paper.

Commenting on his world tour in the late autumn our representative said that in all the markets he visited it was clear / that there was no shortage of paper : indeed orders were hard to get but at the same time he did not find / any feeling of alarm. He also said that, generally speaking, it was thought that within two or three years the situation would improve. / /

One Hundred Words per Minute

(Seventy minutes allowed for transcription)

The oblique lines, / , mark the division of time, but the reader must not make a pause when they occur, unless the sense requires it. The double lines, / / , mark the completion of each minute.

The forty-ninth Annual General Meeting of the United Rubber
¼ Estates Limited will be held on April 22nd at 26 Bridge Street, London. /

The following are extracts from the Chairman's statement :

The fall in the price of rubber may not be so steep as that experienced
½ in other / commodity markets but that is because natural rubber in recent years has not risen so high. The fall, however, has gone far enough to
¾ cut / severely into our margin of profit. Events are too uncertain to justify a firm expression of opinion regarding the future course of prices.
1 The motor / / car industry in America is particularly sensitive to any setback in trade and it is expected that car production in 1958 will
¼ exceed / four and a half million cars as compared with over six million in 1957.

½ On the other hand, Europe, which is now a / larger consumer of natural rubber than the United States, has so far shown no reduction in
¾ demand. Whether this happier state of affairs will continue / must depend not only on whether there is an early recovery in America but on
2 political developments in Europe. These have taken a course which / / if continued can hardly prove favourable to industry. Russia as well as
¼ China is now a large consumer of natural rubber. We do not have / sufficient information upon which to base any estimate of their probable requirements for 1958. It is perhaps reasonable to assume that they
½ will / not fall below the amount taken in 1957 which was, approximately, 280,000 tons.

¾ Figures for exports from India for / the first two months of this year show a decline of over 20,000 tons. If this trend continues it will help
3 to counteract the / / effects of a fall in consumption. It is not unkind, however, to assume that from that country there have been shipments of
¼ natural rubber which / have not appeared in published returns. Also, India's need for foreign exchange is so great that in spite of internal strain
½ a real effort will / be made to maintain the production and export of rubber. Some of the methods employed may not be entirely regular and some of
¾ the exports / may not appear in the official returns.

The estimated figures for the production of natural rubber in 1958
4 indicate a distinct reduction in / / output. You will understand that any estimate must in all the circumstances be received with a good deal of
¼ reserve. The one certain fact is / that unless rubber prices rise, and there is little indication of this happening, our profits for the current year will
½ fall substantially. That is a / prospect which can be regarded as temporary and one which this company is well equipped to meet. Trade
¾ will recover, and, when natural rubber is / freely available with all its special qualities, it will again be required in increasing quantities in spite
5 of the competition of the synthetic rubber industry. / /

1959
SCOTTISH LEAVING CERTIFICATE EXAMINATION

COMMERCE

LOWER GRADE

Thursday, 12th March—9.15 A.M. to 11.15 A.M.

All candidates should attempt FIVE questions, namely, the two questions in Section A, and any three questions from Section B.

Candidates should read the questions carefully. The answers should be clearly expressed and entirely relevant.

N.B.—Write legibly and neatly, and leave a space of about half an inch between the lines.

Marks will be deducted for bad spelling and bad punctuation, and for writing which is difficult to read.

The value attached to each question is shown in brackets after the question.

SECTION A

The two questions in this Section should be attempted.

1. Why must we import? What are the principal categories of British visible imports? **(20)**

2. Compare the advantages and disadvantages of a multiple shop with those of a departmental store. **(20)**

SECTION B

THREE questions should be attempted from this Section.

3. Why is it easier for a limited company to raise capital than it is for either a sole trader or a partnership? **(20)**

4. How do produce markets assist the distribution of the important raw materials of manufacture? Give examples. **(20)**

5. What services do banks render to the British public? **(20)**

6. What services are normally entrusted to local authorities rather than to private enterprise? Why is this so? **(20)**

7. "Without commerce production would be incomplete." Explain this statement and give examples in support of it. **(20)**

(C64412)

1959
SCOTTISH LEAVING CERTIFICATE EXAMINATION

COMMERCE

HIGHER GRADE

Thursday, 12th March—9.15 A.M. to 11.15 A.M.

All candidates should attempt FIVE questions, namely, the two questions in Section A, and any three questions from Section B.

Candidates should read the questions carefully. The answers should be clearly expressed and entirely relevant.

N.B.—Write legibly and neatly, and leave a space of about half an inch between the lines.

Marks will be deducted for bad spelling and bad punctuation, and for writing which is difficult to read.

The value attached to each question is shown in brackets after the question.

SECTION A

The two questions in this Section should be attempted.

1. What is meant by an " appreciating " exchange ? Explain how a movement of this kind is likely to affect the actions of (*a*) importers and (*b*) exporters. **(20)**

2. Examine the advantages and drawbacks of the retail co-operative movement. **(20)**

SECTION B

THREE questions should be attempted from this Section.

3. Explain and discuss the importance of grading in the buying and selling of the principal primary commodities in world markets. **(20)**

4. Discuss the main sources of capital available to British industry. **(20)**

5. Why were marketing boards established for the sale of agricultural products? Discuss the advantages and disadvantages of these boards from the point of view of the consumer. **(20)**

6. What part is played by the Money Market in the operation of the British monetary system? **(20)**

7. Describe the main difficulties which a British manufacturer may encounter in his attempts to sell his products in foreign markets and discuss the action which may be taken to overcome these obstacles. **(20)**

1959

SCOTTISH LEAVING CERTIFICATE EXAMINATION

ECONOMICS

LOWER GRADE

Thursday, 12th March—1.0 P.M. to 3.0 P.M.

All candidates should attempt FIVE questions, namely, the two questions in Section A, and any three questions from Section B.

Candidates should read the questions carefully. The answers should be clearly expressed and entirely relevant.

N.B.—Write legibly and neatly, and leave a space of about half an inch between the lines.

Marks will be deducted for bad spelling and bad punctuation, and for writing which is difficult to read.

The value attached to each question is shown in brackets after the question.

SECTION A

The two questions in this Section should be attempted.

1. Distinguish between time wages and piece wages. In what types of industries would you expect to find the latter? Give reasons. **(20)**

2. What are the principal causes of monopoly? **(20)**

SECTION B

THREE questions should be attempted from this Section.

3. Why does the demand curve normally slope downwards from left to right? Are there any exceptions to the general rule? **(20)**

4. Explain and discuss the chief functions of money. **(20)**

5. Why is "rent" described as a surplus income? **(20)**

6. Explain why the real incomes of individuals are affected to an unequal degree by changes in the value of money. **(20)**

7. Why is it easier to increase the supply of certain types of labour than of others? **(20)**

S

All

Ca

N.E

The

a ci

3
lord

4
Brit

5
pren

6

7

(C6

1959

SCOTTISH LEAVING CERTIFICATE EXAMINATION

ECONOMICS

HIGHER GRADE

Thursday, 12th March—1.0 P.M. to 3.0 P.M.

All candidates should attempt FIVE questions, namely, the two questions in Section A, and any three questions from Section B.

Candidates should read the questions carefully. The answers should be clearly expressed and entirely relevant.

N.B.—Write legibly and neatly, and leave a space of about half an inch between the lines.

Marks will be deducted for bad spelling and bad punctuation, and for writing which is difficult to read.

The value attached to each question is shown in brackets after the question.

SECTION A

The two questions in this Section should be attempted.

1. What is the balance of payments ? Discuss its main features. **(20)**

2. Examine the factors on which the value of a plot of land in the centre of a city depends. **(20)**

SECTION B

THREE questions should be attempted from this Section.

3. Why are people willing to rent more houses at controlled rents than landlords are willing to let ? **(20)**

4. Why is the Bank of England described as the " central " bank of the British monetary system ? **(20)**

5. What is meant by the term " entrepreneur " ? Explain why the entrepreneur is important in all forms of industrial activity. **(20)**

6. Explain and discuss what an economist means by " full employment ". **(20)**

7. Examine the function of interest in the economic system. **(20)**

(C64316)

SC

All

Can

N.B

The

Cred

why

crop

2

Cope

1959

SCOTTISH LEAVING CERTIFICATE EXAMINATION

ECONOMIC GEOGRAPHY

LOWER GRADE

Friday, 20th March—1.30 P.M. to 3.30 P.M.

All candidates should attempt FIVE questions, namely, the two questions in Section A, and any three questions from Section B.

Candidates should read the questions carefully. The answers should be clearly expressed and entirely relevant.

N.B.—Write legibly and neatly, and leave a space of about half an inch between the lines.

Marks will be deducted for bad spelling and bad punctuation, and for writing which is difficult to read.

The value attached to each question is shown in brackets after the question.

Credit will be given for sketch maps and diagrams in any question in which they are appropriate.

SECTION A

The two questions in this Section should be attempted.

1. "Rice is the principal food of nearly half the human race." Explain why this is so and describe the conditions which favour the growth of this crop. **(20)**

2. Give an account of the factors which assisted the growth as a port of Copenhagen **or** Liverpool **or** Marseilles. **(20)**

SECTION B

THREE questions should be attempted from this Section.

3. Give a concise description of the development of hydro-electric power schemes in Scotland. **(20)**

4. What are the main agricultural crops of France **or** Italy **or** West Germany? Comment on the climatic and other factors which favour the growth of each of the crops which you mention. **(20)**

5. Describe the geographical conditions which foster the development of "plantation agriculture", and give some account of the chief products grown under this system. **(20)**

6. What geographical and economic factors have led to the diminishing importance of the Lancashire cotton industry, particularly in export markets? **(20)**

7. Examine the causes which led to the expansion of industry in **either** North-Eastern U.S.A. **or** the Paris Basin. **(20)**

1959

SCOTTISH LEAVING CERTIFICATE EXAMINATION

ECONOMIC GEOGRAPHY

HIGHER GRADE

Friday, 20th March—1.30 P.M. to 3.30 P.M.

All candidates should attempt **FIVE** questions, namely, the two questions in Section A, and any three questions from Section B.

Candidates should read the questions carefully. The answers should be clearly expressed and entirely relevant.

N.B.—Write legibly and neatly and leave a space of about half an inch between the lines.
Marks will be deducted for bad spelling and bad punctuation, and for writing which is difficult to read.

The value attached to each question is shown in brackets after the question.

Credit will be given for sketch maps and diagrams in any question in which they are appropriate.

SECTION A

The two questions in this Section should be attempted.

1. Describe the rainfall distribution in India, and show the connection between this and the principal crops of the country. (20)

2. The following tabular statement gives the value (in millions of pounds) of certain exports from the United Kingdom for the years named, together with the relevant volume and price indices :—

Year	*1953*	*1955*	*1957*
Iron and steel	135	156	213
Road vehicles and parts	248	298	334
Aircraft and engines	63	62	110
Ships and boats	40	54	79
Machinery and electrical goods	551	629	748
....	..	..	..
....	..	..	..
Total metals and engineering products ..	1,313	1,514	1,833
Chemicals	178	233	267
Textiles	325	311	302
Other manufactures	283	330	354
Food, beverages and tobacco	150	172	206
Coal, coke, etc.	71	64	62
....	..	..	..
....	..	..	..
Total exports	2,582	2,674	3,325
Volume index of U.K. exports	96	107	116
Index number of U.K. export prices (1954 = 100)	101	102	111

Write a commentary on the above statement. (20)

SECTION B

THREE questions should be attempted from this Section.

3. What do you understand by "soil erosion"? Give instances of its occurrence, stating in each case the particular causes which gave risc to it. Indicate the various measures which can be taken in order to secure an improvement. **(20)**

4 What is the St Lawrence Seaway? Describe its principal features and analyse the probable effects of its construction on the economic life of the regions which it will serve. **(20)**

5. Give an account of the mineral resources and mining industries of South Africa **or** Australia **or** Chile. **(20)**

6. Examine the geographical and economic factors which fostered the development of the motor-car industry of England **or** the margarine industry of Holland **or** the chemical industry of Germany. **(20)**

7. Describe, and account for, the distribution of population in **either** Scotland **or** Ireland. **(20)**

1959
SCOTTISH LEAVING CERTIFICATE EXAMINATION

ECONOMIC HISTORY

LOWER GRADE

Friday, 20th March—9.15 A.M. to 11.15 A.M.

All candidates should attempt FIVE questions, namely, the two questions in Section A, and any three questions from Section B.

Candidates should read the questions carefully. The answers should be clearly expressed and entirely relevant.

N.B.—Write legibly and neatly, and leave a space of about half an inch between the lines.

Marks will be deducted for bad spelling and bad punctuation, and for writing which is difficult to read.

The value attached to each question is shown in brackets after the question.

SECTION A

The two questions in this Section should be attempted.

1. Give an account of the Acts passed after the Second World War in order to establish the " Welfare State ". **(20)**

2. What economic causes have led to the drift of the country people to the towns since the beginning of the nineteenth century ? **(20)**

SECTION B

THREE questions should be attempted from this Section.

3. What were the main features of the domestic system of manufacture ? With which industries is this system particularly associated ? **(20)**

4. What were the chief obstacles to the adoption of improved methods in agriculture in the eighteenth century and how were these difficulties overcome ? **(20)**

5. Describe the growth of factory legislation between 1802 and 1850. **(20)**

6. What were the principal effects of the general introduction in 1856 of the principle of limited liability ? **(20)**

7. Describe the main changes in the organisation and operation of the railways of Great Britain since 1900. **(20)**

(C64415)

1959

COTTISH LEAVING CERTIFICATE EXAMINATION

ECONOMIC HISTORY

HIGHER GRADE

Friday, 20th March—9.15 A.M. to 11.15 A.M.

ll candidates should attempt **FIVE** questions, namely, the two questions in Section A, and any three questions from Section B.

ndidates should read the questions carefully. The answers should be clearly expressed and entirely relevant.

B.—Write legibly and neatly, and leave a space of about half an inch between the lines.

Marks will be deducted for bad spelling and bad punctuation, and for writing which is difficult to read.

he value attached to each question is shown in brackets after the question.

SECTION A

The two questions in this Section should be attempted.

1. Examine the causes of the high incidence of unemployment in Scotland etween the two World Wars and describe the action which has been taken in n effort to secure an improvement. **(20)**

2. Give an account of the principal features of the "New Model" Trade nionism. **(20)**

SECTION B

THREE questions should be attempted from this Section.

3. State the main conclusions of the Poor Law Commission of 1834 and analyse the events which followed the passing of the Poor Law Amendment Act of that year. (20)

4. Examine the effects on the predominant type of farming in this country of the change which took place in 1932 in British agricultural policy. (20)

5. "The Education Act of 1870 is one of the great landmarks of our social history." Comment on this statement and indicate the chief provisions of the Act. (20)

6. Compare and contrast the system of control of the currency of this country in 1914 and in 1958. (20)

7. "The achievements of civil engineering between 1760 and 1830 lie at the very heart of the Industrial Revolution." Explain this statement and illustrate its truth with examples. (20)

1959

COTTISH LEAVING CERTIFICATE EXAMINATION

AGRICULTURE

LOWER GRADE

Monday, 16th March—9:30 A.M. to 12 NOON.

Not more than FIVE questions should be attempted.

nswers should, wherever possible, be illustrated by suitable diagrams.

athematical tables are supplied.

list of atomic weights will be found in the book of mathematical tables.

arks will be deducted for bad spelling and bad punctuation, and for writing that is difficult to read.

he value attached to each question, or to each part of a question, is shown in the margin.

Marks

1. (*a*) Describe the cycle of events which takes place in a cylinder of 4-stroke diesel engine. **10**

(*b*) Make a labelled diagram of a tractor-mounted single-furrow ough, and state the uses of the main parts. **10**

2. (*a*) (i) Explain what is meant by a heavy soil. **3**
(ii) Describe hat can be done in farming practice to improve the texture of a heavy il, stating the reasons for each operation. **11**

(*b*) Describe an experiment you would perform in order to find the rcentage weight of organic matter in an oven-dry soil. **4**

(*c*) Explain what is meant by the lime requirement of a soil. **2**

[TURN OVER

Marks

3. (*a*) Name the chemical compound of manurial value which is contained in rock phosphate, and from its formula calculate the percentage weight of phosphoric acid (P_2O_5) which it contains. 6

(*b*) Describe laboratory tests by which you would establish the presence of (i) phosphate and (ii) potash in a sample of a compound fertiliser. 8

(*c*) State, with their approximate average percentages, the manurial constituents which are present in the following fertilisers :— (i) nitrochalk, (ii) bone meal, (iii) basic slag, (iv) sulphate of ammonia. 6

4. Describe under the following headings how to grow and secure a successful crop of maincrop potatoes :—(i) preparation of soil, (ii) manuring, (iii) control of weeds, (iv) harvesting, (v) storage. 20

5. (*a*) Explain (i) what is meant by weeds, and (ii) in what ways they are harmful in agriculture. 6

(*b*) In the case of **EITHER** redshank **OR** charlock, (i) describe its appearance, its habit of growth, and how it spreads, and (ii) explain how it may be controlled in a crop of oats. 8

(*c*) Select **TWO** of the following plants, and explain why they are common as farm weeds :—dock, creeping buttercup, common nettle. 3 each

6. (*a*) Name the animals or crops which are affected by each of the following, and briefly indicate the nature of the damage in each case :— (i) clubroot, (ii) liver rot, (iii) sturdy, (iv) warble fly, (v) leather-jacket. 12

(*b*) Select **TWO** of the above, and in each case state the conditions under which it thrives, and the control measures you would recommend. 4 each

7. (*a*) Name two breeds of dairy cattle, and describe how they differ (i) in appearance, (ii) in regard to special merits and limitations. 9

(*b*) (i) Explain why milk should be kept clean, and (ii) make a list of the precautions which should be taken on a dairy farm in order to achieve this. 9

(*c*) State the approximate duration of the gestation period in (i) the cow, and (ii) the ewe. 2

1959

SCOTTISH LEAVING CERTIFICATE EXAMINATION

AGRICULTURE

HIGHER GRADE—(FIRST PAPER)

Monday, 16th March—9.30 A.M. to 11.30 A.M.

Not more than FIVE questions should be attempted.

Answers should, wherever possible, be illustrated by suitable diagrams.

Mathematical tables are supplied.

A list of atomic weights will be found in the book of mathematical tables.

Marks will be deducted for bad spelling and bad punctuation, and for writing that is difficult to read.

The value attached to each question, or to each part of a question, is shown in the margin.

Marks

1. State the factors which influence soil temperature, and explain fully the effects of each. **20**

2. (*a*) Explain what is meant by soil acidity and how it is neutralised by calcium hydroxide. **6**

(*b*) Describe the process by which superphosphate is manufactured, and with the aid of chemical equations explain what substances are present in the product. **10**

(*c*) From their chemical formulae calculate the weight of sulphate of potash which contains the same weight of potash (K_2O) as does one hundredweight of muriate of potash. **4**

[TURN OVER

Marks

3. (*a*) If sulphate of ammonia (20·8% N) costing £20 13*s*. per ton, superphosphate (21% P_2O_5) costing £15 17*s*. per ton, and muriate of potash (60% K_2O) costing £19 13*s*. per ton have been mixed together to produce a compound fertiliser containing 5% N, 14·5% P_2O_5 and 4·15% K_2O, calculate :—

(i) the proportions by weight of the three constituent fertilisers in the mixture, and 7

(ii) the total cost of the three constituent fertilisers in one ton of the mixture. 5

(*b*) State (i) the names of **TWO** farm crops of different types for which a compound fertiliser of the composition stated above would be suitable, and (ii) rates of application of this fertiliser which would be suitable for the two crops you have named. 4

(*c*) State, with reasons, the uses of nitrochalk. 4

4. (*a*) With the help of labelled diagrams, explain how differences in structure between the alimentary canal of the ox and that of the pig are related to the kinds of carbohydrate foods which these animals can digest. 10

(*b*) Distinguish between (i) true protein and crude protein, (ii) starch and starch equivalent. 8

(*c*) From which constituents in its food can an animal produce fat in its body ? 2

5. (*a*) Explain what is meant by a combine drill, and describe its advantages and disadvantages. 8

(*b*) Describe the feed mechanism in any type of machine used for sowing turnip seed. 7

(*c*) Explain the meaning of each of the following terms given on an electric motor :—(i) 5 H.P., (ii) 440 V., (iii) 50 cycles/second, (iv) 1,440 r.p.m. 5

6. (*a*) State how the cycle of events in a cylinder of a 4-stroke diesel engine differs from the cycle of events in a cylinder of a 4-stroke petrol engine. 8

(*b*) With the aid of a diagram, explain the working of a petrol carburettor. 8

(*c*) With reference to a named machine, distinguish between mechanical advantage and mechanical efficiency. 4

7. (*a*) State what is meant by (i) a warm front, (ii) a cold front, and explain the kinds of weather associated with each. 8

(*b*) Explain the meaning and agricultural significance of **THREE** of the following :—annual rainfall, relative humidity, dew point, anticyclone. 4 each

1959
SCOTTISH LEAVING CERTIFICATE EXAMINATION

AGRICULTURE

HIGHER GRADE—(SECOND PAPER)

Monday, 16th March—1.30 P.M. to 3.30 P.M.

Not more than FIVE questions should be attempted.

Answers should, wherever possible, be illustrated by suitable diagrams.

Mathematical tables are supplied.

A list of atomic weights will be found in the book of mathematical tables.

Marks will be deducted for bad spelling and bad punctuation, and for writing that is difficult to read.

The value attached to each question, or to each part of a question, is shown in the margin.

Marks

1. (*a*) Give an account of the processes occurring within a plant by which (i) carbohydrates are manufactured, and (ii) the substances from which the carbohydrates are made become available at the place of manufacture. **16**

(*b*) State the ways in which sunshine influences the rate of manufacture of carbohydrates by plants. **4**

2. Describe under the following headings how to grow and secure a good crop of mangolds :—(i) suitable soil and climatic conditions, (ii) preparation of soil, (iii) manuring, (iv) rate of seeding per acre and time of sowing, (v) control of weeds, (vi) harvesting and storage. **20**

[TURN OVER

Marks

3. (i) Name **TWO** harmful weeds which are commonly found in **cereal crops** and **TWO** which are commonly found in **pasture grass,** (ii) describe the characteristics which make each weed troublesome, and (iii) explain how each weed is favoured by the conditions provided by the crops in which it is found. **20**

4. (*a*) Select **TWO** of the following plants, and in the case of each (i) describe its habit of growth, and (ii) explain its main agricultural uses :—

Italian ryegrass, marrowstem kale, wild white clover. **5 each**

(*b*) State and explain the advantages and disadvantages of each of the following methods of laying land down to grass :—(i) direct seeding, (ii) seeding under a nurse crop. **10**

5. (*a*) With the help of labelled diagrams, state the structural differences between the reproductive system of the cow and that of the hen. **12**

(*b*) Describe in detail how an unfertilised egg is formed and laid by a hen. **8**

6. Write detailed notes on **TWO** of the following :—

Ascaris, potato eelworm, sturdy. **10 each**

7. (*a*) With the aid of diagrams describe and explain the appearance of animals of the F 1 generation resulting from crossing pure-bred Aberdeen Angus cows with a pure-bred Hereford bull. **14**

(*b*) Explain the meaning of **TWO** of the following terms :—

backcross, outcross, homozygote, heterozygote. **3 each**

1959

SCOTTISH LEAVING CERTIFICATE EXAMINATION

HOMECRAFT

LOWER GRADE—GROUP I (COOKERY AND NEEDLEWORK)

PRACTICAL TEST—NEEDLEWORK

Tuesday, 10th March—9.15 A.M. to 11.15 A.M.

INSTRUCTIONS TO CANDIDATES

1. Print, in ink, your full name and that of the school and town on the envelope provided for the purpose.

2. Read through the paper and study the details of the test.

3. Proceed with the test, using the material provided. No additional material will be supplied. If you should make a mistake in cutting out, you must do the best you can with the given material.

4. At the end of the examination, remove the needle from your test. Write your name and that of the school and town on the label provided.

5. Use the safety pin provided to attach the label firmly to your finished test.

6. Put into the envelope—
   (*a*) the test ;
   (*b*) all cuttings left over from the given length of material ;
   (*c*) the paper pattern pieces pinned together.

7. Seal the envelope.

TEST

Pyjamas—Section of the Tunic.

Using the material and pattern supplied, cut out and make up the section of the tunic as indicated by broken lines in the sketch.

(C64339)

Needlesubs.

II Lower

1959

SCOTTISH LEAVING CERTIFICATE EXAMINATION

HOMECRAFT

LOWER GRADE—GROUP II (NEEDLEWORK AND SIMPLE DRESSMAKING)

PRACTICAL TEST—NEEDLESUBJECTS

Tuesday, 10th March—9.15 A.M. to 11.45 A.M.

INSTRUCTIONS TO CANDIDATES

1. Print, in ink, your full name and that of the school and town on the envelope provided for the purpose.

2. Read through the paper and study the details of the test.

3. Proceed with the test, using the material provided. No additional material will be supplied. If you should make a mistake in cutting out, you must do the best you can with the given material.

4. At the end of the examination, remove the needle from your test. Write your name and that of the school and town on the label provided.

5. Use the safety pin provided to attach the label firmly to your finished test.

6. Put into the envelope—

   (*a*) the test ;

   (*b*) all cuttings left over from the given length of material ;

   (*c*) the paper pattern pieces pinned together.

7. Seal the envelope.

TEST

Dress with a flared skirt.

From the pattern and material supplied, cut out and make up the dress. Close the side opening with tacking but no zip fastener is to be inserted. Show the finish on one side seam, a shoulder seam and 1 inch of the waist seam. The making of the belt is not required in the test.

(C64340)

S

en

ma
mi

yo

th

1959

SCOTTISH LEAVING CERTIFICATE EXAMINATION

HOMECRAFT

HIGHER GRADE—GROUP I (COOKERY, LAUNDRYWORK, HOUSEWIFERY AND NEEDLEWORK)

PRACTICAL TEST—NEEDLEWORK

Tuesday, 10th March—9.15 A.M. to 11.15 A.M.

INSTRUCTIONS TO CANDIDATES

1. Print, in ink, your full name and that of the school and town on the envelope provided for the purpose.

2. Read through the paper and study the details of the test.

3. Proceed with the test, using the material provided. No additional material will be supplied. If you should make a mistake in cutting out, you must do the best you can with the given material.

4. At the end of the examination, remove the needle from your test. Write your name and that of the school and town on the label provided.

5. Use the safety pin provided to attach the label firmly to your finished test.

6. Put into the envelope—

   (*a*) the test ;

   (*b*) all cuttings left over from the given length of material ;

   (*c*) the paper pattern pieces pinned together.

7. Seal the envelope.

TEST

Playsuit.

Using the material and pattern supplied, cut out the playsuit and make up the garment as far as time permits.

(C64341)

SC

Tra
SEP

of (
sho
arti

the

(C

1959

SCOTTISH LEAVING CERTIFICATE EXAMINATION

HOMECRAFT—GROUP II

HIGHER GRADE (SECOND PAPER)

PRACTICAL TEST—DESIGN AND ALLIED ART

Friday, 13th March—1.0 P.M. to 3.0 P.M.

A sheet of "Preliminary Sketching" paper may be used for rough work. Tracing paper may also be used. These extra papers should be handed in SEPARATELY from your finished work.

Make a design, suitable for embroidery, for **ONE** of the following articles :—

(*a*) Teacosy cover in mauve linen.
(*b*) Workbag in cream linen.
(*c*) Square cushion cover in deep blue cotton.
(*d*) Circular mat in pale yellow rayon.

The size of the articles is left to your own discretion. Except in the case of (*c*) your design should be drawn full size. Where (*c*) is chosen, the design should be drawn to a reduced scale, but the full length and breadth of the article should be stated.

Your design should be carried out in colour, and the type of threads and the stitches to be used should be stated.

(C64498)

ienc

lassi

eogr
(2s.

listor

omm

ome

rt in

ural

usic

nglis

rt in
(Re
9d.

nglis
972
Sco

Teach
Sec
on
N
F
S
T

Teach
Sec
on
H
G

Fu
No. 36

ience in Secondary Schools. (First Three Years.) 9*d.* (*11d.*).

lassics in Secondary Schools. 1*s.* 3*d.* (*1s.* 5*d.*).

eography in Secondary Schools. (Reprinted 1956, revised price.) 2*s.* 0*d.* (*2s.* 2*d.*).

istory in Secondary Schools. (Reprinted 1956, revised price.) 1*s.* 6*d.* (*1s.* 8*d.*).

ommercial Subjects in Secondary Schools. 1*s.* 0*d.* (*1s.* 2*d.*).

omecraft in Secondary Schools. 9*d.* (*11d.*).

rt in Secondary Schools. 1*s.* 0*d.* (*1s.* 2*d.*).

ural Subjects in Secondary Schools. 9*d.* (*11d.*).

usic in Secondary Schools. 1*s.* 0*d.* (*1s.* 2*d.*).

nglish in Secondary Schools. 1*s.* 6*d.* (*1s.* 8*d.*).

rt in Secondary Schools. Report on the teaching. Extract from Cmd. 9722. (Report of the Secretary of State for Scotland on Education in Scotland, 1955.) 9*d.* (*11d.*).

nglish in Secondary Schools. Report on the teaching. Extract from Cmd. 9722. (Report of the Secretary of State for Scotland on Education in Scotland, 1955.) 9*d.* (*11d.*).

eaching in Secondary Schools. Extracts from Cmd. 162. (Report of the Secretary of State for Scotland on Education in Scotland, 1956.) Reports on:

Nautical Subjects. 6*d.* (*8d.*).

Rural Subjects. 6*d.* (*8d.*).

Science. 1*s.* 0*d.* (*1s.* 2*d.*).

Technical Subjects. 9*d.* (*11d.*).

eaching in Secondary Schools. Extracts from Cmd. 407. (Report of the Secretary of State for Scotland on Education in Scotland, 1957.) Reports on:

History. 9*d.* (*11d.*).

Geography. 9*d.* (*11d.*).

Full particulars of other publications of the Department are contained in Sectional List No. 36 which may be obtained from H.M. Stationery Office.

Printed and published by
HER MAJESTY'S STATIONERY OFFICE

To be purchased from
York House, Kingsway, London W.C.2
423 Oxford Street, London W.1
13A Castle Street, Edinburgh 2
109 St. Mary Street, Cardiff
39 King Street, Manchester 2
Tower Lane, Bristol 1
2 Edmund Street, Birmingham 3
80 Chichester Street, Belfast
or through any bookseller

Printed in Great Britain

S.O. Code No. 30-46-0-59

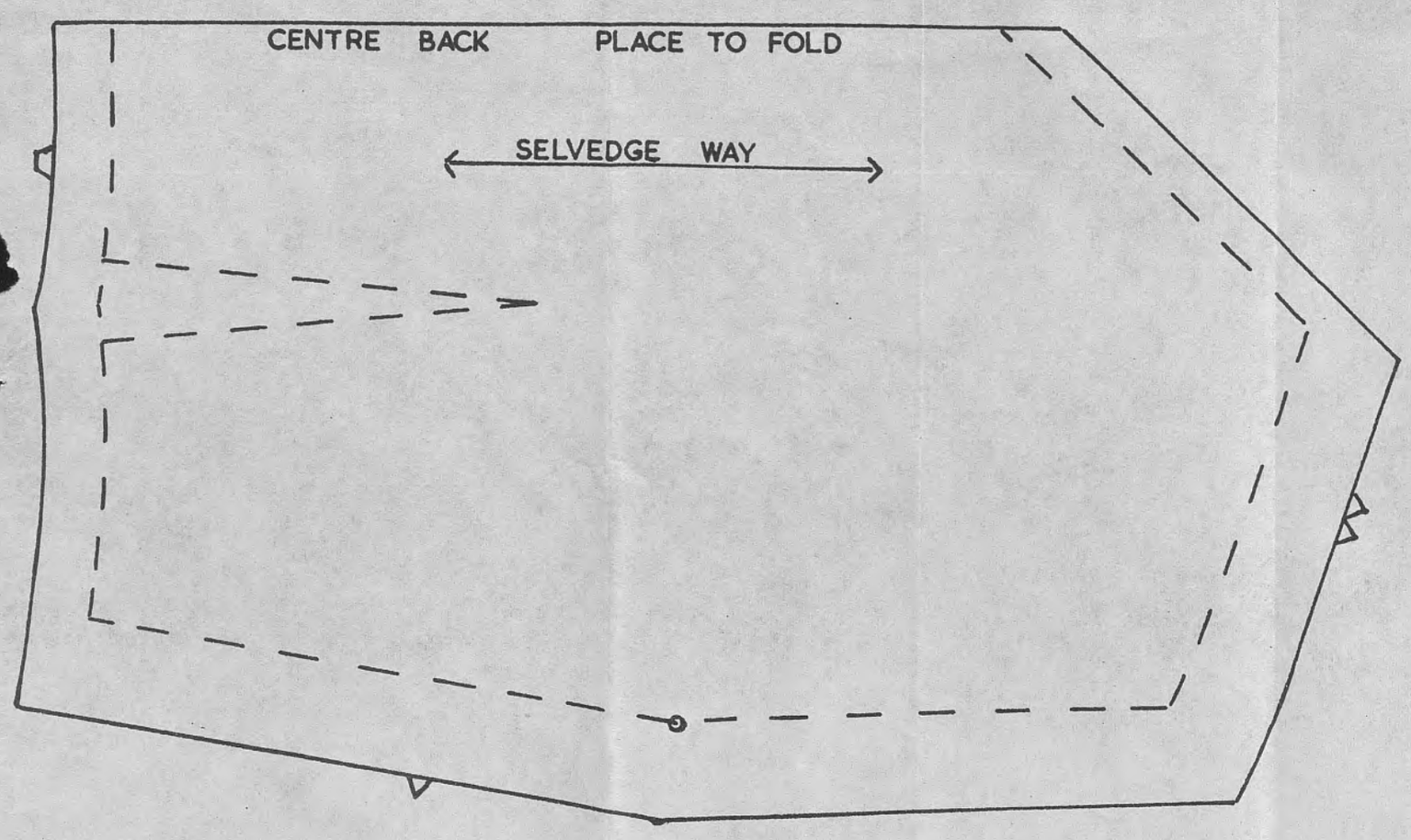
CENTRE BACK
PLACE TO FOLD
SELVEDGE WAY

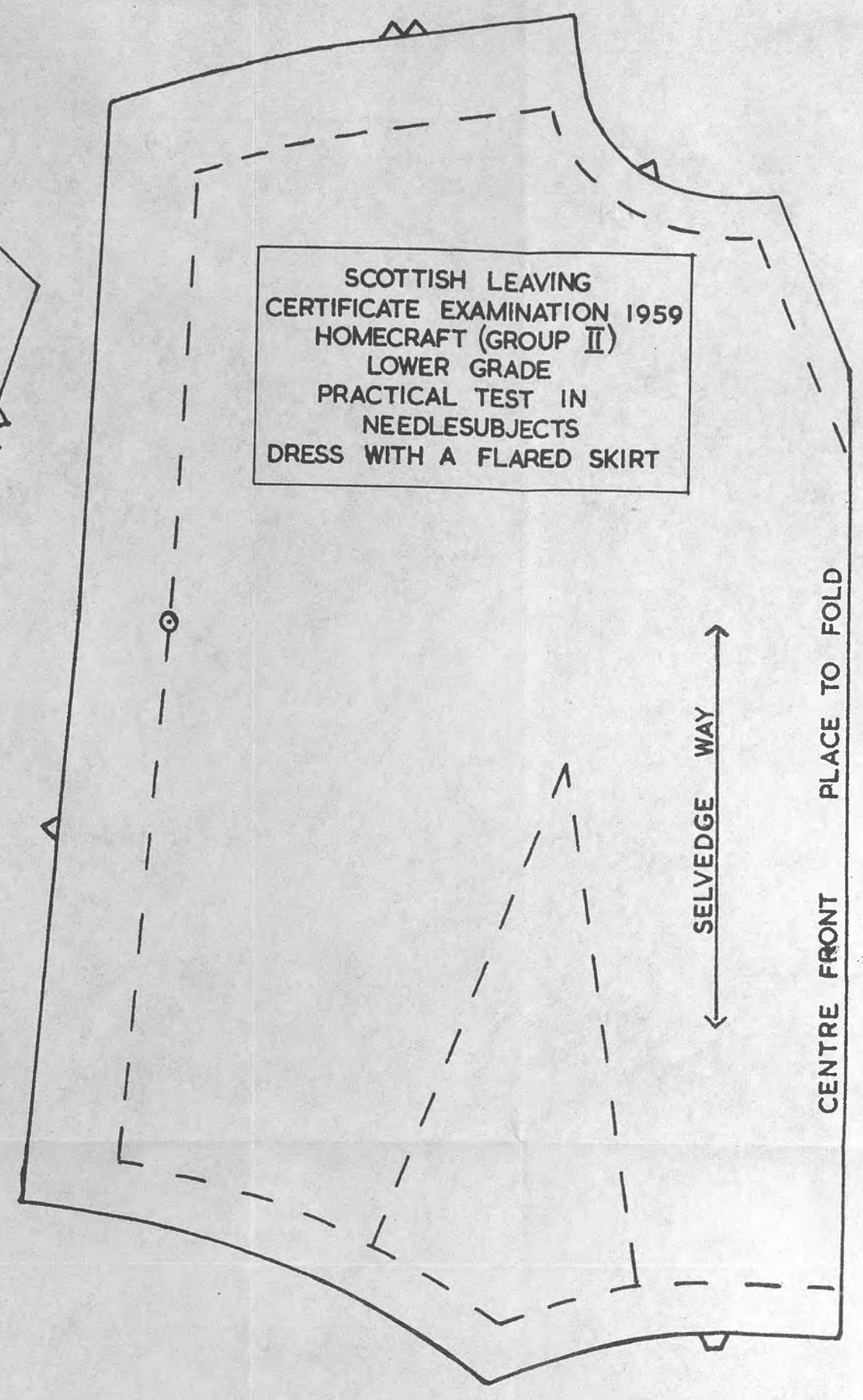
SCOTTISH LEAVING
CERTIFICATE EXAMINATION 1959
HOMECRAFT (GROUP II)
LOWER GRADE
PRACTICAL TEST IN
NEEDLESUBJECTS
DRESS WITH A FLARED SKIRT
SELVEDGE WAY
CENTRE FRONT
PLACE TO FOLD

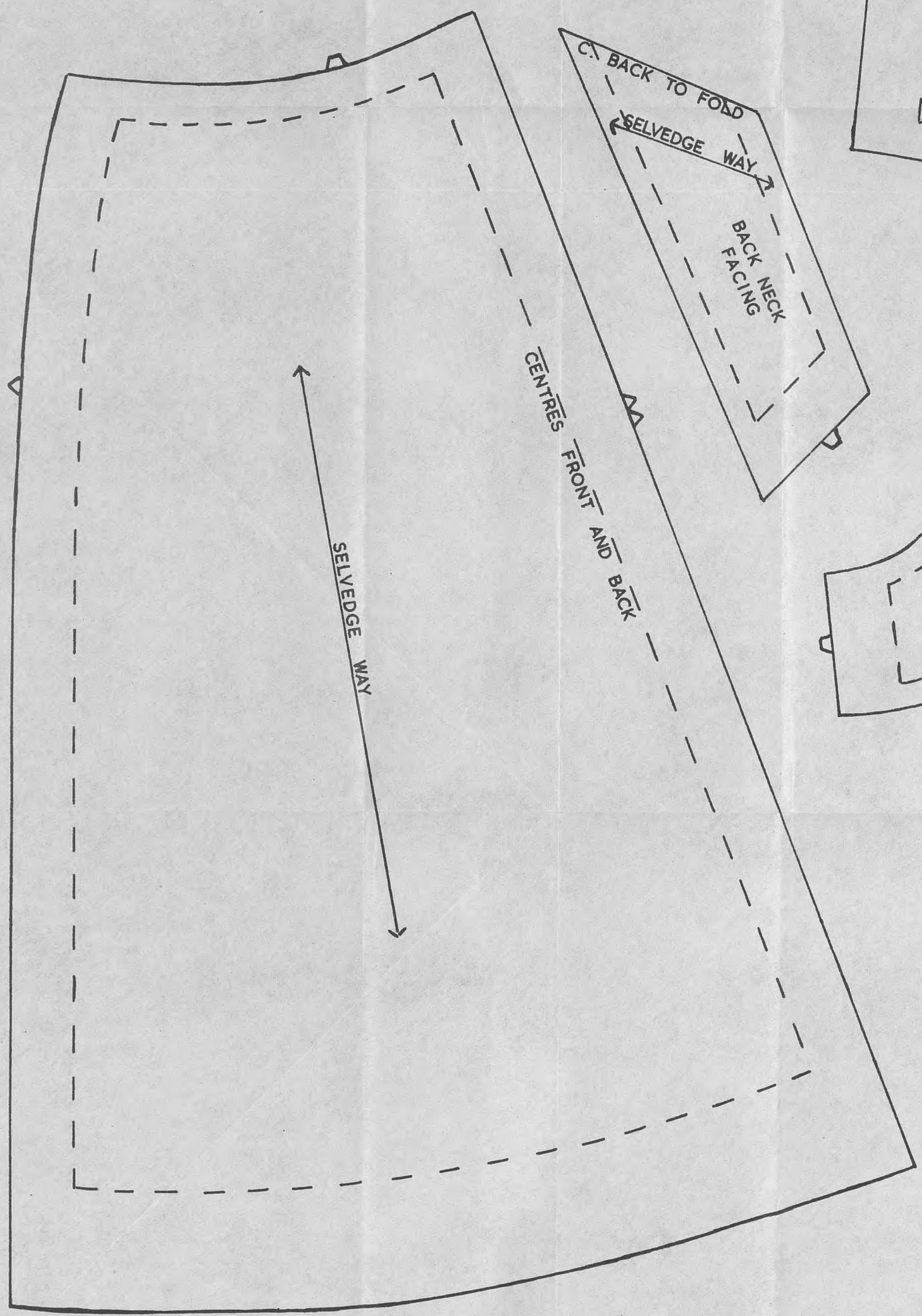
SELVEDGE WAY
CENTRES FRONT AND BACK

C. BACK TO FOLD
SELVEDGE WAY
BACK NECK FACING

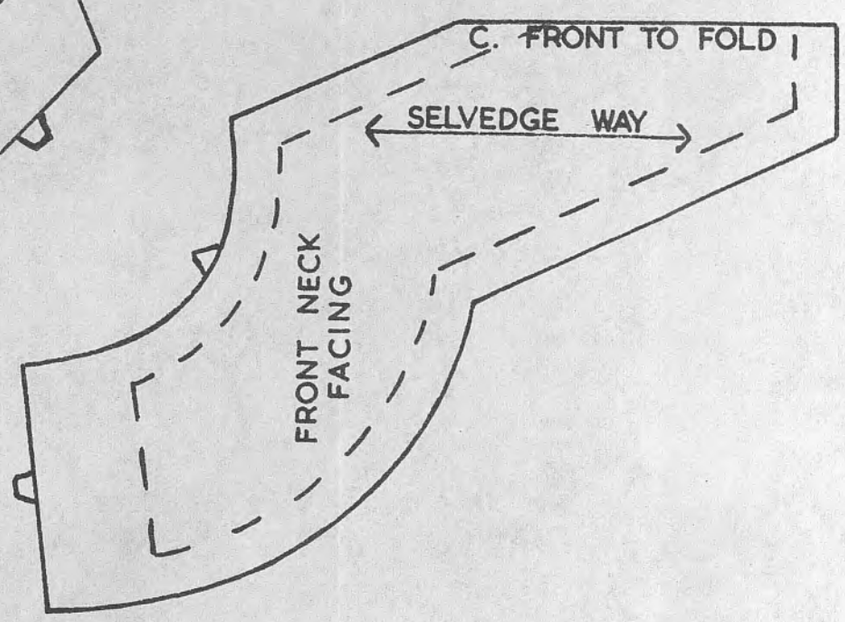
C. FRONT TO FOLD
SELVEDGE WAY
FRONT NECK FACING

SCOTTISH LEAVING
CERTIFICATE EXAMINATION 1959
HOMECRAFT (GROUP I)
HIGHER GRADE
PRACTICAL TEST IN
NEEDLEWORK
PLAYSUIT

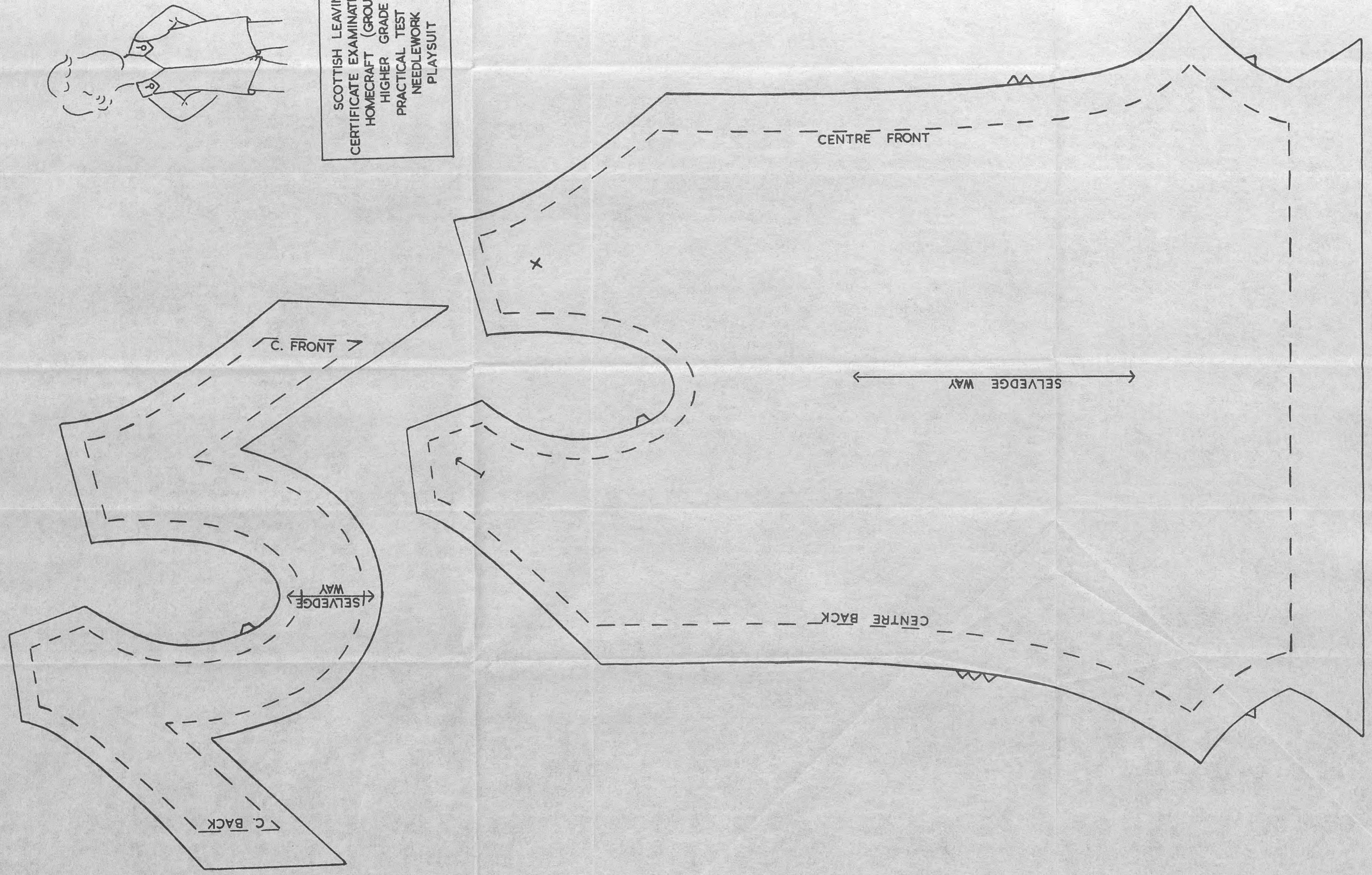

(C64341)

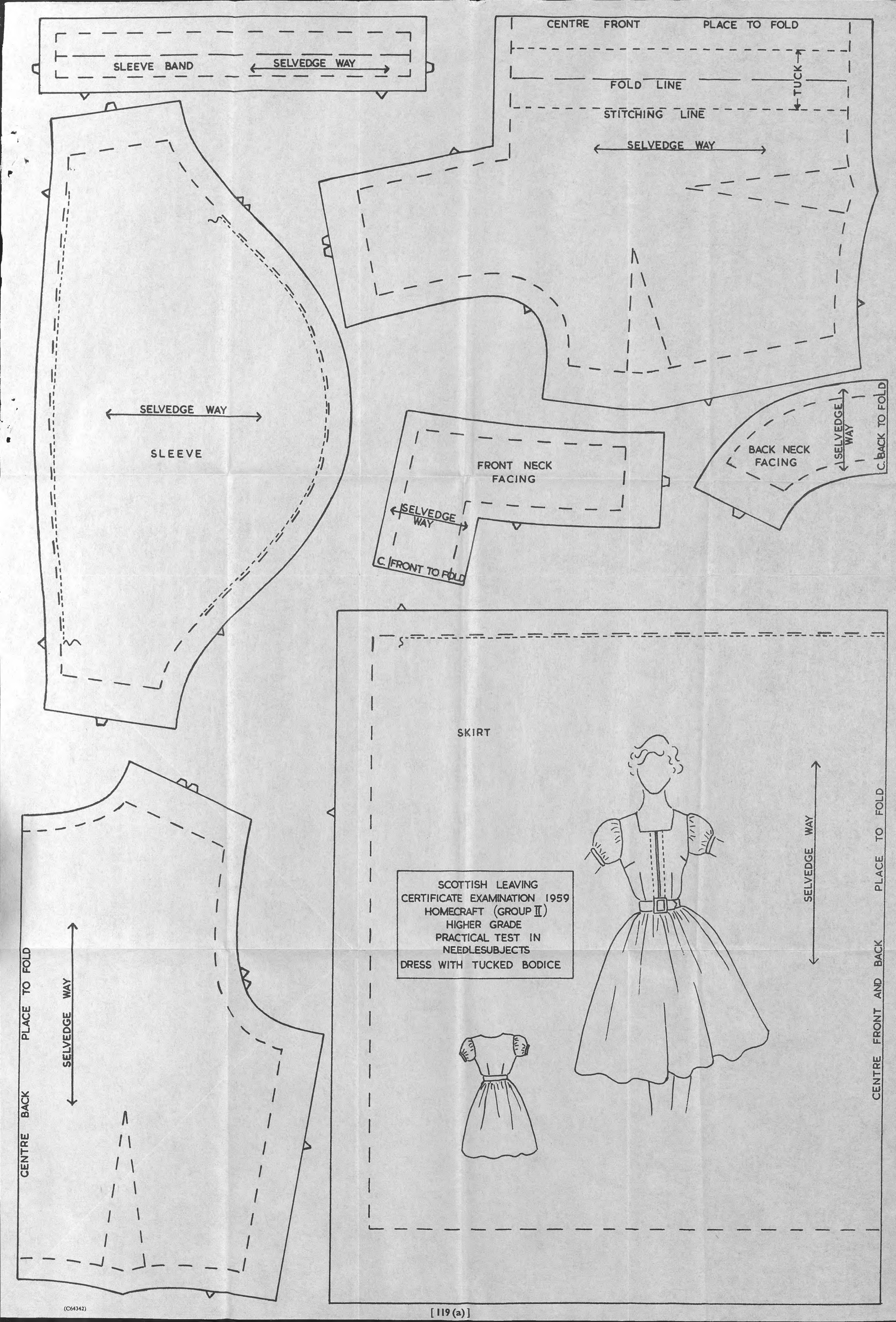
SLEEVE BAND
SELVEDGE WAY
CENTRE FRONT
PLACE TO FOLD
FOLD LINE
TUCK
STITCHING LINE
SELVEDGE WAY
SELVEDGE WAY
SLEEVE
FRONT NECK FACING
SELVEDGE WAY
C. FRONT TO FOLD
BACK NECK FACING
SELVEDGE WAY
C. BACK TO FOLD
SKIRT
CENTRE BACK
PLACE TO FOLD
SELVEDGE WAY
SELVEDGE WAY
CENTRE FRONT AND BACK
PLACE TO FOLD
SCOTTISH LEAVING
CERTIFICATE EXAMINATION 1959
HOMECRAFT (GROUP II)
HIGHER GRADE
PRACTICAL TEST IN
NEEDLESUBJECTS
DRESS WITH TUCKED BODICE

(C64342)

SCOTTISH LEAVING
CERTIFICATE EXAMINATION 1960.
HOMECRAFT (GROUP I)
LOWER GRADE.
PRACTICAL TEST IN
NEEDLEWORK.
GIRL'S COTTON SKIRT.

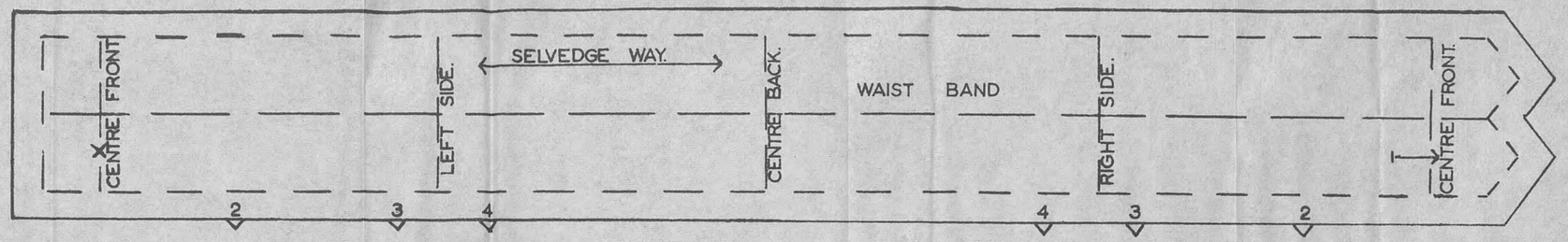

DIRECTIONS.

I JOIN THE SIDE SEAMS.

II PREPARE THE FRONT OPENING.

III ARRANGE THE FULNESS AND APPLY THE WAIST BAND.

IV SHOW THE FINISH OF THE LOWER EDGE OF A FRONT SECTION.

V COMPLETE THE FASTENING OF WAIST BAND.

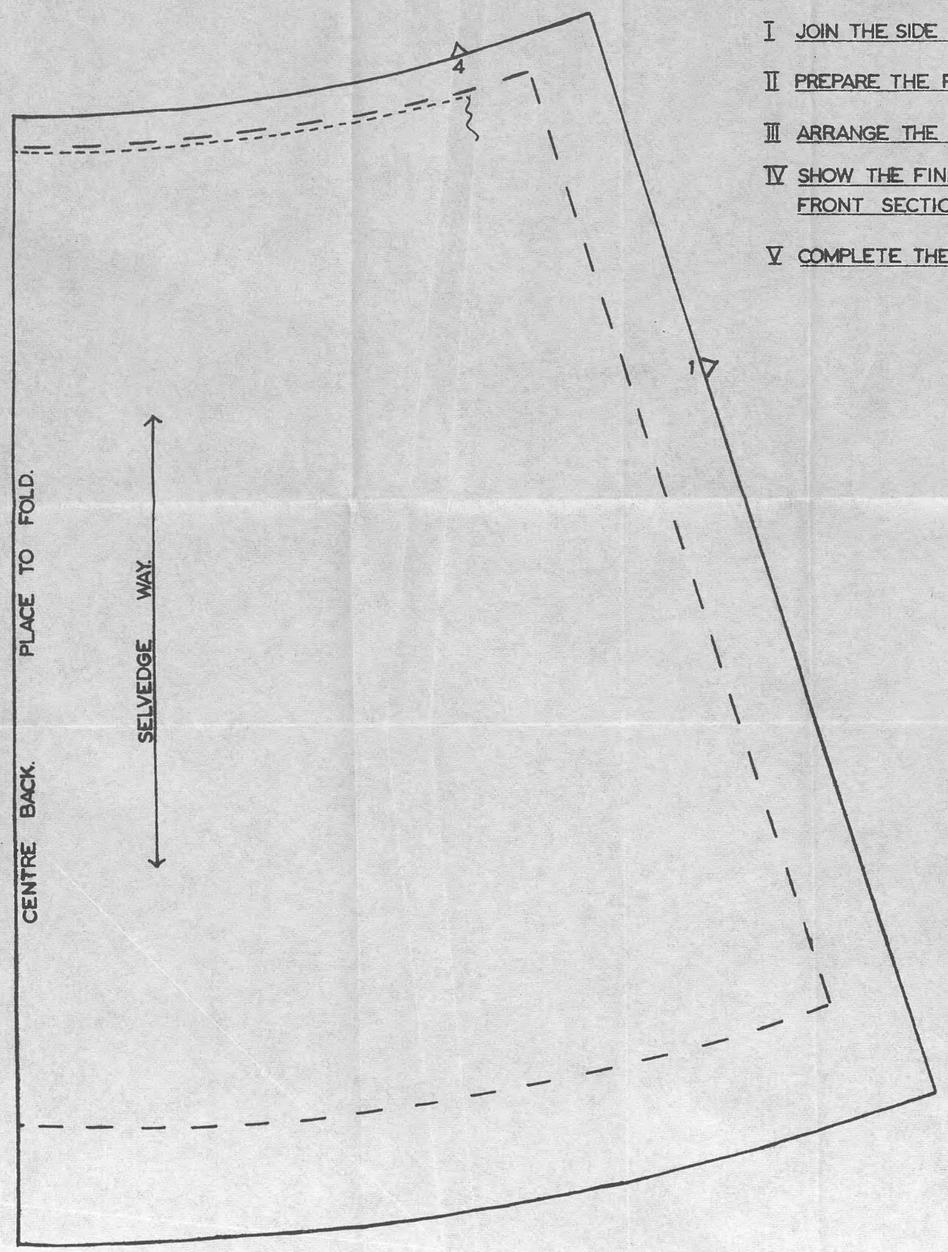

GIRL'S COTTON SKIRT.

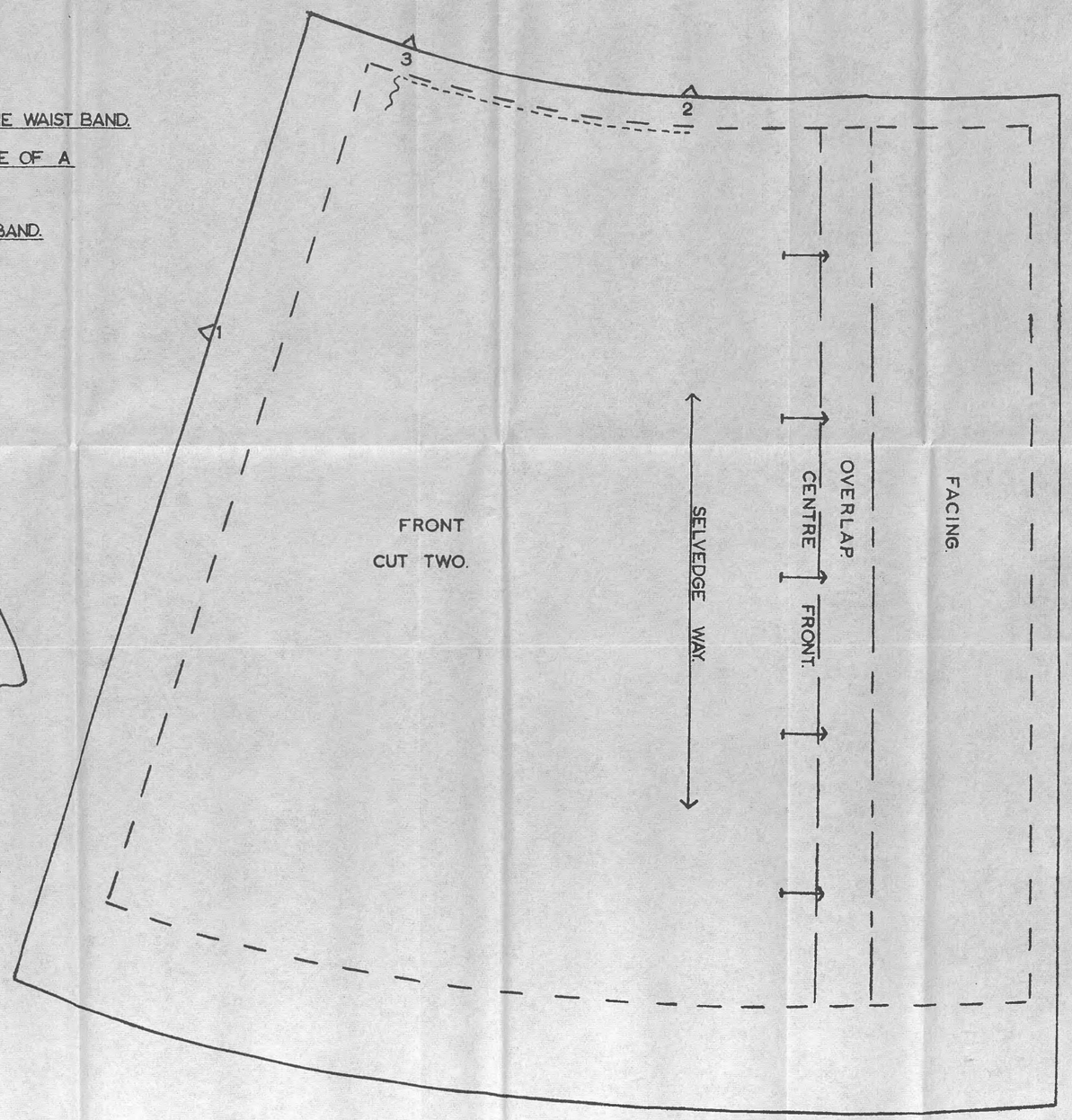

50626 (M.F.P.)

1959

SCOTTISH LEAVING CERTIFICATE EXAMINATION

HOMECRAFT

HIGHER GRADE—GROUP II—FIRST PAPER—(NEEDLEWORK, DRESSMAKING, EMBROIDERY, DESIGN AND ALLIED ART)

PRACTICAL TEST—NEEDLESUBJECTS

Tuesday, 10th March—9.15 A.M. to 12.45 P.M.

INSTRUCTIONS TO CANDIDATES

1. Print, in ink, your full name and that of the school and town on the envelope provided for the purpose.

2. Read through the paper and study the details of the test.

3. Proceed with the test, using the material provided. No additional material will be supplied. If you should make a mistake in cutting out, you must do the best you can with the given material.

4. At the end of the examination, remove the needle from your test. Write your name and that of the school and town on the label provided.

5. Use the safety pin provided to attach the label firmly to your finished test.

6. Put into the envelope—
   (*a*) the test ;
   (*b*) all cuttings left over from the given length of material ;
   (*c*) the paper pattern pieces pinned together.

7. Seal the envelope.

TEST

Dress with tucked bodice.

Using the material and pattern supplied, cut out and make up the dress with tucked bodice.

Only one sleeve need be made up and inserted. The side opening should be closed with tacking as for a zip fastening but the insertion of the fastener and the making of the belt are not part of the test.

(C64342)

SCOTTISH LEAVING
CERTIFICATE EXAMINATION 1959.
HOMECRAFT (GROUP I)
LOWER GRADE
PRACTICAL TEST IN
NEEDLEWORK
PYJAMAS
(SECTION OF TUNIC)

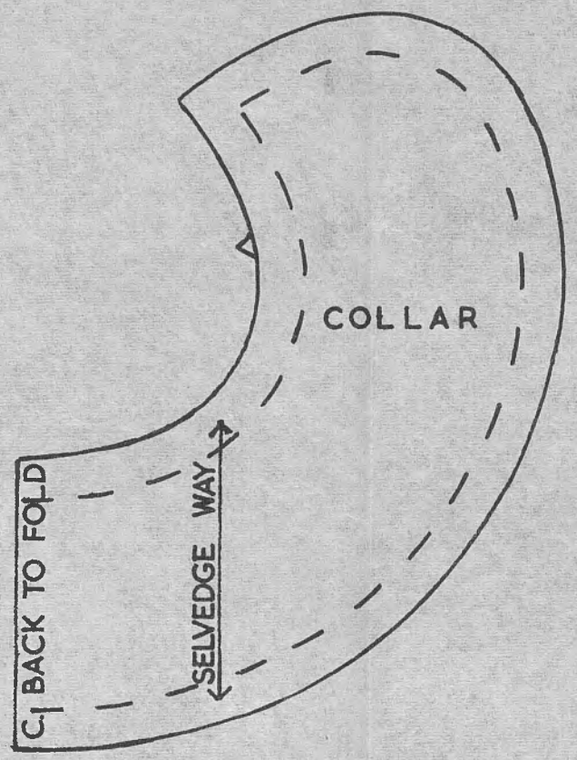

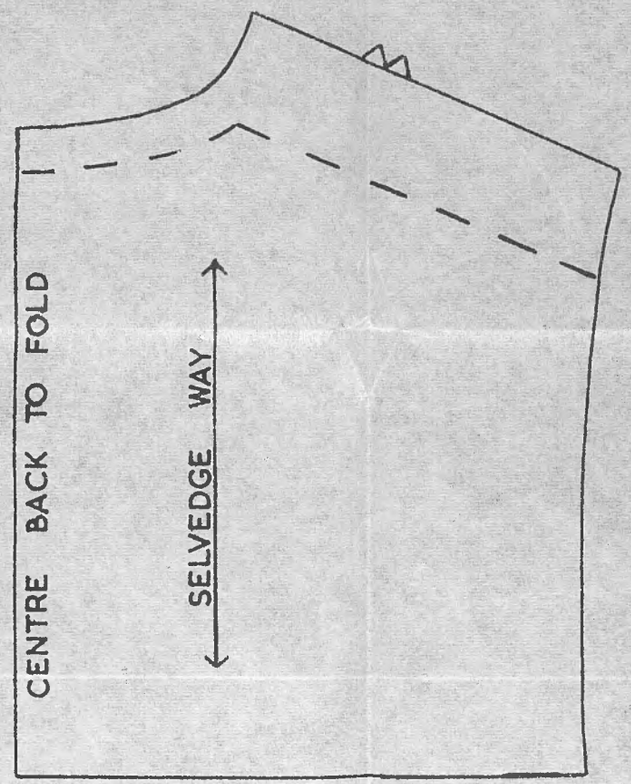

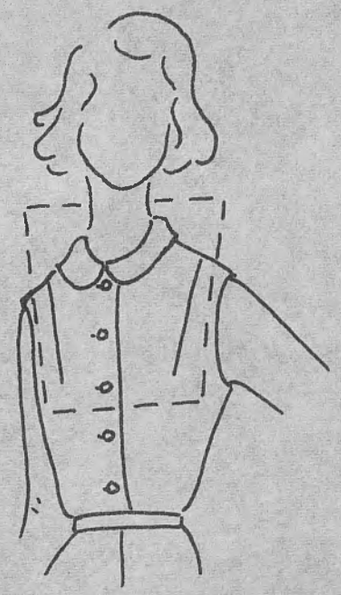

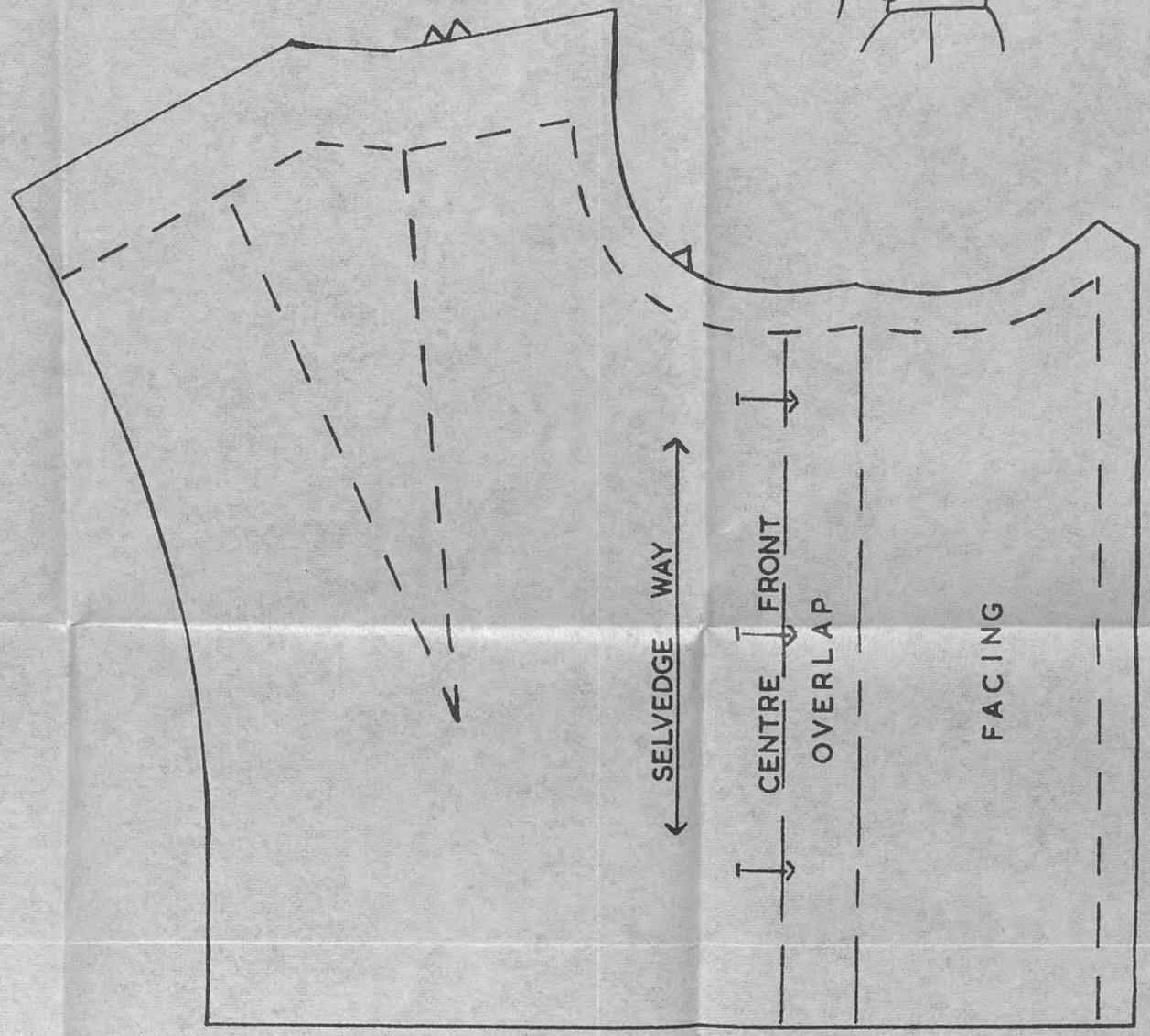

(C64339)

SCOTTISH LEAVING CERTIFICATE EXAMINATION
1959

Commercial Subjects
HIGHER GRADE—TYPEWRITING—(b)

Thursday, 19th March—2.10 P.M. to 3.45 P.M.

INSTRUCTIONS TO CANDIDATES

1. Read carefully the instructions at the head of each exercise.

2. Any defect in the machine should be pointed out to the Supervising Officer who will send to the examiners a certificate giving particulars of the defect and of the loss of time caused thereby.

3. Each exercise should be begun on a fresh page.

4. Any spoiled work should be cancelled by drawing a line through it.

5. At the close of the examination you will receive from the Supervising Officer your typescripts of the Copying and Accuracy Tests. These must then be inserted in your examination book, along with your other typescripts, and handed to the Supervising Officer.

6. The value attached to each question is shown in brackets after the question.

2.

Development: In 1958 Group capital expenditure amounted to about £2 mn. Projects for 1959 include additions to research and development facilities in the U.K.

Prospects for 1959: In the first three months of this year Group sales and profits have been higher than for the corresponding months of 1958 but not as high as had been hoped at the time of budgetting. It seems likely from information so far available that this pattern will persist for much of the year.

The following figures put the financial position of the co. clearly and succintly:

	1958 £	1957 £
Group trading profit:	4,754,000	4,416,000
Depreciation . .	1,847,000	1,822,000
Taxation . .	1,295,000	1,362,000
Minority interests .	59,000	28,000
Net profit: . .	1,553,000	1,203,000
Dividends . .	586,000	532 000
Retained profit .	968,000	671,000
Group Net Assets . .	25,961,000	24,850,000
Ordinary dividend - rate .	20%	18%
times covered .	2.8	2.4

Any further information you may require will be willingly supplied

Yours/fully,

James C. Borthwick,
Secretary.

(24)

[TURN OVER

QUESTION 4

1. Type your name, school and grade on the back of the sheets in the top left-hand corner.

2. Set out the following letter neatly and attractively on quarto paper, with one carbon copy. Insert to-day's date and your teacher's and your own initials as dictator and typist respectively. Make any necessary corrections.

Alexander Gibb & Co. Ltd.

Abbey Works,
Rochdale.

Y. D. Campbell, Esq.,
29 Abbotsford Park,
Melrose.

D/Sir,

In reply to your letter of yesterday's date enquiring about the present position and prospects of our co., I can now give the following information:

Trading: The sales of all companies in the Group expanded in 1958, the total being about 10% higher at £30 mn. compared with £27 mn. in 1957. In the United Kingdom the measures taken by the Government to halt inflation do not appear directly or indirectly to have influenced sales to home customers. Exports continued to account for between a fifth and a quarter of total sales

Development /

QUESTION 3

Type your name, school and grade at the top of the sheet or sheets.

Answers to the following questions are to be typed on quarto paper.

Number your answers to correspond with the questions.

(*a*) Give what are, in your opinion, **the** best line-end divisions of the following words :—

indefatigable ; boundary ; enterprise ; justification ; phenomenon ; hypodermic.

(*b*) Type a copy of the following notice, about 5 in. deep × 3 in. wide, displayed in a form suitable for insertion in a newspaper.

Corporation of Glasgow. Mortgage Loans at 5½ per cent. per annum for Five, Six or Seven years. Mortgages are prepared free of cost to lenders and interest is payable half-yearly to 15th May and 11th November. The loans are secured on the full funds, rates and revenues of the Corporation and are full Trustee Securities. Forms of offer may be obtained from the undersigned

G. B. Easlemont, C.A.,
City Chamberlain.

City Chambers (Room 26),
285 George Street, Glasgow C.1

(*c*) Name three important points of difference between a commercial letter and an official letter.

(12)

QUESTION 5

1. Type your name, school and grade on the back of the sheet in the top left-hand corner.

2. Display attractively the following table on quarto paper and rule in red ink. Make any necessary corrections.

Extract from the Report of the Commission on the Co-operative Movement,

of

Page 9

% of Share of Retail Trade,

Type of Shop	1935 %	1950 %	1955 %	1935 %	1950 %	1955 %
	Food and Household Stores			Footwear		
Co-operatives	13.9	15.1	14.5	9.3	9.0	7.8
Multiples	14.5	16.5	17.0	41.0	47.0	50.5
Others	71.6	68.4	68.5	49.7	44.0	41.7
	Women and Children's Wear			Household Durables and Furnishing		
Co-operatives	5.7	6.0	5.4	5.2	7.7	7.6
Multiples	10.5	21.5	26.5	14.0	20.0	21.5
Others	83.8	72.5	68.1	80.8	72.3	70.9

Published by the Co-operative Union Limited, Manchester.

(24)

SCOTTISH LEAVING CERTIFICATE EXAMINATION 1959

Commercial Subjects

HIGHER GRADE—TYPEWRITING—(a)

Thursday, 19th March—1.30 P.M. to 2 P.M.

INSTRUCTIONS TO CANDIDATES

1. Read carefully the instructions at the head of each exercise.

2. Any defect in the machine should be pointed out to the Supervising Officer who will send to the examiners a certificate giving particulars of the defect and of the loss of time caused thereby.

3. Each exercise should be begun on a fresh page.

4. Any spoiled work should be cancelled by drawing a line through it.

5. The tests are to be worked in the following order :—
   (1) The Copying Test.
   (2) The Accuracy Test.

6. The value attached to each question is shown in brackets after the question.

QUESTION 1. COPYING TEST

Instructions (Not to be typed)

Type your name, school and grade at the top of a foolscap sheet.

Set the marginal stops for a 60-space line.

Make one copy, in **double** line-spacing, of the passage printed below.

No credit will be given for completing this test in less than the time allowed.

No part of the test is to be re-typed.

The use of an eraser is **not** permitted.

At the conclusion of this test, your typescript is to be handed to the Supervising Officer.

The war years saw a large increase in female employment, the peak being reached in 1943 when the total was probably about 2,000,000 higher than in 1939. Immediately after the war, with the reduction in size of the Women's Auxiliary Services and the munitions industries, there was a substantial reduction in the number of women in the labour force.

In the years 1945–48 the reduction amounted to nearly 1,000,000. At mid-1948, when the present series of employment statistics began with the introduction of the National Insurance scheme, the total female working population was estimated at 7,100,000, of whom 7 million were in civil employment. By mid-1954 the female working population had increased by 570,000 and by mid-1957 by a further 270,000. The total of about 7,950,000 in 1957 included some 285,000 employers and self-employed persons and 15,000 in H.M. Forces. During the period 1948 to 1957 the female working population increased by almost 840,000 compared with an increase of about 600,000 males.

Female employment in all manufacturing industries increased by 360,000, the principal increases being food, drink and tobacco (100,000), engineering, shipbuilding and electrical goods (90,000), vehicles (45,000), clothing (35,000), paper and printing (35,000) and chemicals and allied trades (20,000). Employment in the textile industries fell by 10,000, after rising by 30,000. **(15)**

QUESTION 2. ACCURACY TEST

Instructions (Not to be typed)

Type your name, school and grade at the top of a foolscap sheet.

Set the marginal stops for a 60-space line.

Set the line-space lever for double spacing.

The whole of the passage printed below may be attempted, but no additional marks will be gained by typing any part of the passage a second time.

The use of an eraser is **not** permitted.

At the conclusion of this test your typescript is to be handed to the Supervising Officer.

Strokes

There was a quiet magic about the hush before the fall. Seed was 66
ripened, fruit was full, new life was born. Rest and sleep were coming to 141
the woods; and pervading the rides and brambly clearings there was a 210
serenity and peace that beggared all telling. Work was done, nothing 280
that was done could be undone. Life had expressed itself unstintingly, in 355
energy and growth and sound and colour, life had made manifest in a 424
thousand forms, and now it was all over, rest and sleep were coming. 495

Where White Admiral and Fritillary had poised and sipped so daintily, 566
now blackberries hung in dark, grape-like clusters. So black that folk often 644
passed them by, for at a little distance there appeared to be none. When 718
there were many reds and greens among the berries, then the trusses stood 792
out for any child to notice, but as every fruit filled and ripened, so did the 871
sprays droop and trail with their load, and, hanging heavy against the 943
hedge and thicket, blended with the shadows and vanished. One particular 1017
part of the Copsford country grew blackberries extraordinarily well. 1087
Surely nowhere else in Sussex county did blackberries grow in such quality 1162
and quantity. 1176

It was a clearing scarcely an acre, among many young birches, in a 1244
remote spot called the Osier Beds. In the days of John Guy there had been 1319
well-tended beds of osiers, but in my day there was no trace of them except 1395
for a few old and cracked willows and two tracts of swampy and impossible 1469
ground. The bramble patch was in the midst of the rather wild, unkempt 1541
young woodland that spread over the higher ground between the quagmires. 1615
It was sandy, somewhat heathy country—some eyebright grew there—and 1684
all about it bracken was on the increase. The Darn was one boundary. To 1758
most the place would have appeared a lost and wasteful wilderness, barbed 1832
with many briars, bounded by bog and brook, but to me it was a little 1902
paradise where wild life came into its own again. 1952

It is cause for wonder and joy the way in which wild life floods back, 2023
like an incoming tide, to surround and submerge all men's little sand 2093
castles. Nature's plants and trees have disrupted them. 2148

(25)

SCOTTISH LEAVING CERTIFICATE EXAMINATION 1959

Commercial Subjects

LOWER GRADE—TYPEWRITING—(a)

Thursday, 19th March—1.30 P.M. to 2.0 P.M.

INSTRUCTIONS TO CANDIDATES

1. Read carefully the instructions at the head of each exercise.

2. Any defect in the machine should be pointed out to the Supervising Officer who will send to the examiners a certificate giving particulars of the defect and of the loss of time caused thereby.

3. Each exercise should be begun on a fresh page.

4. Any spoiled work should be cancelled by drawing a line through it.

5. The tests are to be worked in the following order :—
   (1) The Copying Test.
   (2) The Accuracy Test.

6. The value attached to each question is shown in brackets after the question.

QUESTION 1. COPYING TEST

Instructions (Not to be typed)

Type your name, school and grade at the top of a quarto sheet.

Set the marginal stops for a 60-space line.

Make one copy, in **double** line spacing, of the passage printed below.

No credit will be given for completing this test in less than the time allowed.

No part of the test is to be re-typed.

The use of an eraser is **not** permitted.

At the conclusion of this test, your typescript is to be handed to the Supervising Officer.

In 1854 the Crystal Palace was moved from Hyde Park, where for three years it had housed the Great Exhibition, and taken to Sydenham, where it was fitted out as a museum. With this the people of Western Europe for the first time were able to form some idea of the luxury and splendour of those biblical cities so often condemned by the prophets as sinks of sin and corruption. Two enormous Old Syrian rooms and a huge palace facade were reconstructed and these exhibits offered an overwhelming impression of an architecture hitherto known only through legend, the Bible, and the fanciful travelogues written by the writers of antiquity.

A ceremonial hall and a royal chamber were also set up. Winged human-headed lions and images of the lion-killer, Gilgamesh, the " conquering hero " and " master of the land ", were put on display. There were reliefs showing exciting martial and hunting scenes of twenty-seven centuries ago, the time of the great King Assurnasirpal. (See Plate V). **(15)**

QUESTION 2. ACCURACY TEST

Instructions (Not to be typed)

Type your name, school and grade at the top of a foolscap sheet.

Set the marginal stops for a 60-space line.

Set the line space lever for double spacing.

The whole of the passage printed below may be attempted, but no additional marks will be gained by typing any part of the passage a second time.

The use of an eraser is **not** permitted.

At the conclusion of this test your typescript is to be handed to the Supervising Officer.

Strokes

I have defined Ladies as people who did not do things for themselves. 74
Aunt Etty was most emphatically such a person. She told me, when she 144
was eighty-six, that she had never made a pot of tea in her life ; and that 219
she had never in all her days been out in the dark alone, not even in a cab ; 296
and I don't believe she had ever travelled by train without a maid. She 369
certainly always took her maid with her when she went in a fly to the 439
dentist's. She asked me once to give her a bit of the dark meat of a chicken, 518
because she had never tasted anything but the breast. I am sure that she 592
had never sewn on a button, and I should guess that she had hardly ever 664
posted a letter herself. There were always people to do these things for her. 743
In fact, in some ways, she was like a royal person. 791

Once she wrote when her maid, the patient and faithful Janet, was 858
away for a day or two : " I am very busy answering my own bell." And 926
I can well believe it, for Janet's work was no sinecure. But, of course, while 1006
Janet was away, the housemaid was doing all the real work ; and Aunt Etty 1079
was only perhaps finding the postage stamps for herself, or putting on her 1155
own shawl—the sort of things she rang for Janet to do, every five minutes 1230
all day long. 1244

She had been an invalid all her life ; but I don't know what (if anything) 1318
had originally been the matter with her. I should guess, however, that she 1394
had really been delicate when young. Her tiny form, her little monkey 1465
hands, seemed to belong to a frail, but wiry, person. But I am quite sure 1539
that, with her iron will, she could have ignored and controlled her ill health, 1619
both of the nerves and the body. **(25)** 1651

SCOTTISH LEAVING CERTIFICATE EXAMINATION
1959

Commercial Subjects
LOWER GRADE—TYPEWRITING—(b)

Thursday, 19th March—2.10 P.M. to 3.45 P.M.

INSTRUCTIONS TO CANDIDATES

1. Read carefully the instructions at the head of each exercise.

2. Any defect in the machine should be pointed out to the Supervising Officer who will send to the examiners a certificate giving particulars of the defect and of the loss of time caused thereby.

3. Each exercise should be begun on a fresh page.

4. Any spoiled work should be cancelled by drawing a line through it.

5. At the close of the examination you will receive from the Supervising Officer your typescripts of the Copying and Accuracy Tests. These must then be inserted in your examination book, along with your other typescripts, and handed to the Supervising Officer.

6. The value attached to each question is shown in brackets after the question.

QUESTION 3

1. Type your name, school and grade on the back of the sheets in the top left-hand corner.

2. Set out the following letter neatly and attractively on quarto paper, with one carbon copy. Insert to-day's date. Make any necessary corrections.

29 King's Crescent,
Aberdeen.

The Editor,
University College Record,
Ipswich.

D/Sir,

I believe you are compiling a record of the achievements of the members of our year at college. The subject interests ~~you~~ me also and I have by dint of enquiry, and sometimes gossip, succeeded in ~~amassing~~ collecting information about a few. As my information may be of use to you, I append a note of my results to date:

John B. Brown, Ph.D., F.R.I.C., is now Senior Lecturer in Inorganic Chemistry in the Imperial College of Technology, Durham.

Alexander Keay, B.Sc., has been awarded a Research Fellowship by the Wilton Foundation of Black River, Oregon. He will be engaged on the study of soils for at least six months in an American University. l.c.

George S. Sanderson, B.Sc., has just graduated Doctor of Philosophy (Ph.D.), in our old Alma Mater. He is a lecturer in Zoology in a Canadian university. I hope to give you the name of the university in my next bulletin. cap.

David Horsburgh, M.A., B.Sc., has resigned his appointment with the Nonesuch Glass Co. to become Planning Officer with a much bigger company in the same industry. (Name of the co. to follow).

James Harkness, B.Sc., emigrated to Canada shortly after ~~the~~ graduation and, I am told, he now has an important appointment with a big firm in Hamilton, Ontario.

After two years' service with the Royal Navy in the Far East, Robert Sandeman has been appointed to the research staff of one of the British Oil companies.

One other name will interest you – John Henry Fraser, who gave us the imaginative poem "The Tramp" in the College Echoes. I particularly liked the second stanza:

"Across the fields breast-high in sunburnt maize,
My journey stretches on from shore to shore,
Through forests which the late year sets ablaze,
Past stricken temples, where of yore
The monks have uttered hour by hour their praise."

Fraser is now a well-known journalist and, so far as I know, has given up poetry.

I have other names on my list and I shall send you another bulletin when I have collected the particulars of their present appointments. I am sure the work you are doing will be valued by all your fellow students.

Yours fittly.

(30)

[TURN OVER

QUESTION 4

1. **Type your name, school and grade on the back of the sheets in the top left-hand corner.**

2. **Prepare the letter and statement as required. All ruling is to be done by the machine. Make any necessary corrections.**

The Secretary of Messrs. James Barbour and Sons, Ltd., your employers, tells you that he has received a letter dated 10th March, 1959, from Mr. Thomas Weir, 39 Bridge Street, Wakefield, Yorks., asking for certain information about the position of the company at 31st December, 1958. You are asked (*a*) to set out neatly and attractively on quarto paper the statement below; and (*b*) to prepare for his signature a short covering letter on octavo paper, with one carbon copy.

James Barbour and Sons, Ltd.
9 Eagle Mills - Wakefield
Statement showing the position of the Co.
9 at 31st December, 1958

Earned profit before taxation	£117,827
Less taxation . . .	62,400
Net profit after taxation .	£ 55,427
Appropriated as follows:	
Preference dividend net . .	£ 3,163
Ordinary dividend net . .	21,562
Balance retained . . .	30,702
	£ 55,427
Preference Shareholders:	
Issued capital . . .	£ 100,000
l.c. Gross Dividend covered by taxable profits. . . .	21.4 times
Capital covered by net assets .	6.4 times
Ordinary Shareholders:	
Issued capital . . .	£ 250,000
l.c. Gross rate of Dividend paid .	15%
Gross rate earned on present capital excluding Reserves .	44%
Net assets attributable to each 5/- Ordinary share . .	10/10d.

(30)

(C64348)

SCOTTISH LEAVING CERTIFICATE EXAMINATION

1959

GEOGRAPHY

HIGHER GRADE (FIRST PAPER)

MAP

FILL THIS IN FIRST

Name of School .....

Name of Pupil .....

TO BE PINNED INSIDE THE CANDIDATE'S BOOK OF ANSWERS AND THUS SENT TO THE DEPARTMENT.

[OVER

ATLANTIC OCEAN AND ADJACENT LANDS.

50220 (M.F.P.)

SCOTTISH LEAVING CERTIFICATE EXAMINATION
1959

HISTORY
LOWER GRADE

Wednesday, 4th March—9.30 a.m. to 12 noon

SECTION I

(To be attempted by all candidates)

FILL THIS IN FIRST

Name of School .....

Name of Pupil .....

TO BE PINNED INSIDE THE CANDIDATE'S BOOK OF ANSWERS AND THUS SENT TO THE DEPARTMENT.

[OVER

SECTION 1 (*a*)

On the accompanying map mark the position of **TEN** of the following with a cross and add the appropriate number as given below :—

(1) Algiers.

(2) Athens.

(3) Bannockburn.

(4) Canterbury.

(5) Copenhagen.

(6) Dublin.

(7) Dumfries.

(8) Dunkirk.

(9) Iona.

(10) Marston Moor.

(11) Plymouth.

(12) Venice. (5)

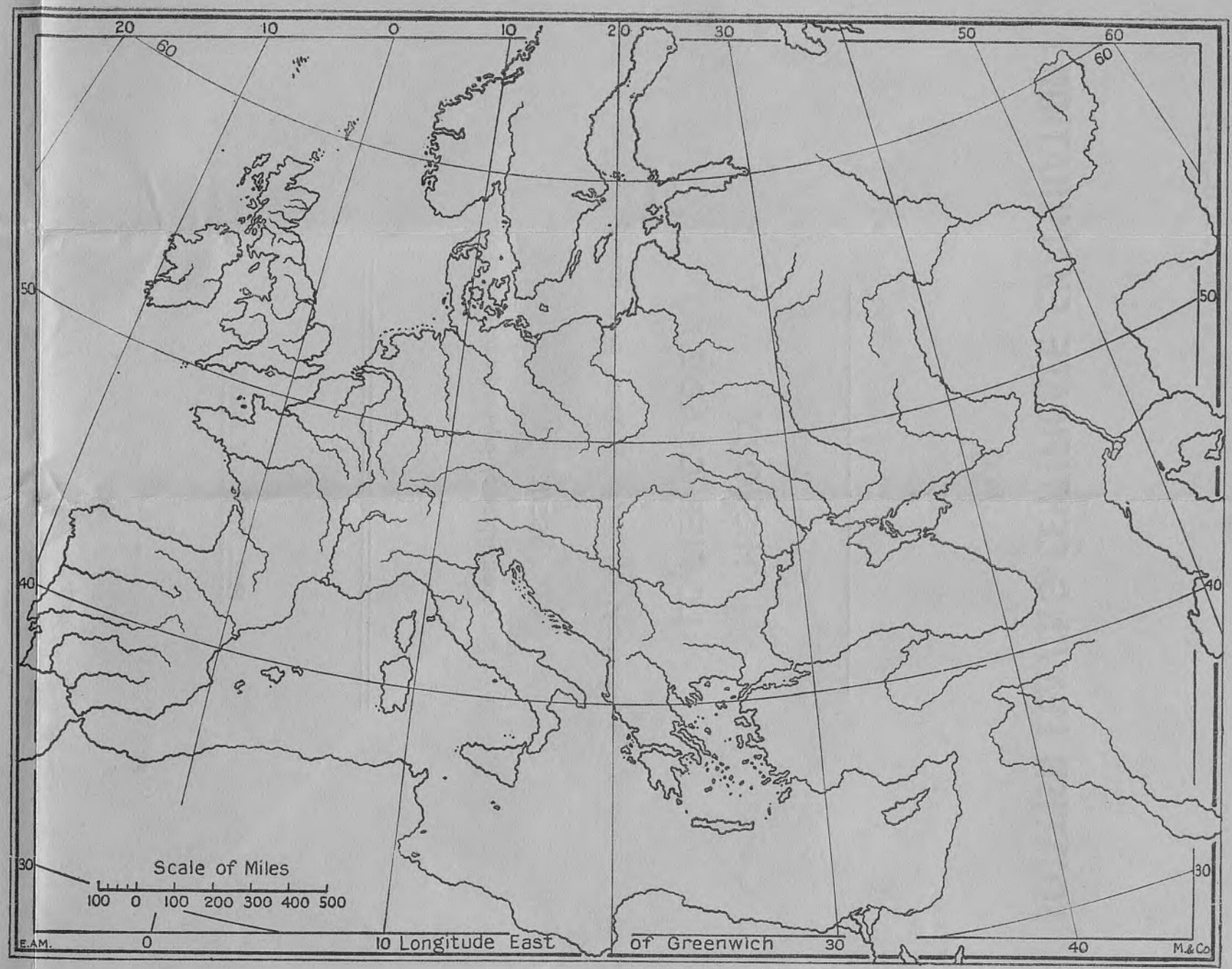

SECTION 1 (*b*)

Give the century, B.C. or A.D., of **TEN** of the following, indicate who or what each was, and say why each is important in history. Answers must be written in the space provided after each name. (15)

(1) The Battle of Actium (century) .....

.....

.....

(2) Gustavus Adolphus (century) .....

.....

.....

(3) The Secret Treaty of Dover (century) .....

.....

.....

(4) The Massacre of Glencoe (century) .....

.....

.....

(5) Hannibal (century) .....

.....

.....

(6) The Battle of Largs (century) .....

.....

.....

(7) Kenneth McAlpin (century) .....

.....

.....

[TURN OVER

(8) Ferdinand Magellan (century) .....

.....

.....

(9) The Battle of Hastings (century) .....

.....

.....

(10) The Porteous Riots (century) .....

.....

.....

(11) The Black Prince (century) .....

.....

.....

(12) The Diet of Worms (century) .....

.....

.....

1959
SCOTTISH LEAVING CERTIFICATE EXAMINATION

HISTORY

HIGHER GRADE

(FIRST PAPER—BRITISH HISTORY)

Wednesday, 4th March—9.30 A.M. to 12 NOON

All candidates must attempt FIVE questions, viz., Section 1 and FOUR questions selected from any part or parts of the paper.

N.B.—Marks will be deducted for bad spelling and bad punctuation, and for writing that is difficult to read.

20 marks are assigned to each question.

Section 1 (to be attempted by all candidates)

(See separate sheet provided for this section.)

Section 2 (55 B.C. *to* A.D. 1485)

1. What evidence can you produce for and against the view that the Roman occupation of Britain was chiefly military ?

2. Estimate the importance in Scottish history of the reign of David I.

3. Examine the claims of Edward I to be the greatest of the Plantagenets.

4. Account for the outbreak of the Wars of the Roses and for the victory of Henry Tudor.

5. Write notes on **two** of the following :—the Synod of Whitby ; the Danelaw ; Harold Godwineson ; St. Anselm ; the Lollards ; the relations of James II with the House of Douglas.

[TURN OVER

Section 3 (1485 *to* 1763)

6. " The Reformation in England was effected by the Crown, that in Scotland against the Crown." How far is this true ?

7. Account for the increasing English hostility to Spain in the reign of Elizabeth Tudor, and state how far the aims of the English were achieved during that reign.

8. What were the chief grievances of the Long Parliament when it met in 1640 and how far were they remedied before the outbreak of the Civil War ?

9. Trace the relations of Charles II with France, explaining how far his policy was unpopular with his people.

10. To what extent is it true to say that the English desired the Union of 1707 but that the Scots did not ?

11. " A great minister in home affairs but inept in foreign affairs." Discuss this estimate of Walpole.

Section 4 (1763 *to* 1914)

12. What were the chief developments in the textile industries during the eighteenth century and what were their social effects ?

13. How far was there an " enlightened toryism " in the reign of George IV ?

14. Explain the causes of the Crimean War and discuss the way in which it was conducted by Britain.

15. " My mission is to pacify Ireland." What did Gladstone do to fulfil this mission and with what degree of success or failure ?

16. How far is it true to say that British foreign policy underwent a revolution in the early years of the twentieth century ?

17. **Either**—Explain the chief steps towards Canadian self-government between the Peace of Paris (1763) and the British North America Act (1867) and describe briefly the circumstances in which they were taken.

Or—Describe and compare the social and political effects on South Africa of the discovery of diamonds and of the gold rush to the Transvaal.

18. Write notes on **two** of the following :—the Stamp Act of 1765 ; Horatio, Viscount Nelson ; Dr. Thomas Chalmers ; The Anti-Corn Law League ; Charles Darwin ; the formation of the Labour Party.

SCOTTISH LEAVING CERTIFICATE EXAMINATION

1959

GEOGRAPHY

LOWER GRADE

MAPS

FILL THIS IN FIRST

Name of School .....

Name of Pupil .....

TO BE PINNED INSIDE THE CANDIDATE'S BOOK OF ANSWERS AND THUS SENT TO THE DEPARTMENT.

[OVER

THE WORLD

Mercator's Projection

PART OF BRITISH ISLES.

CONTOUR MAP OF A REGION

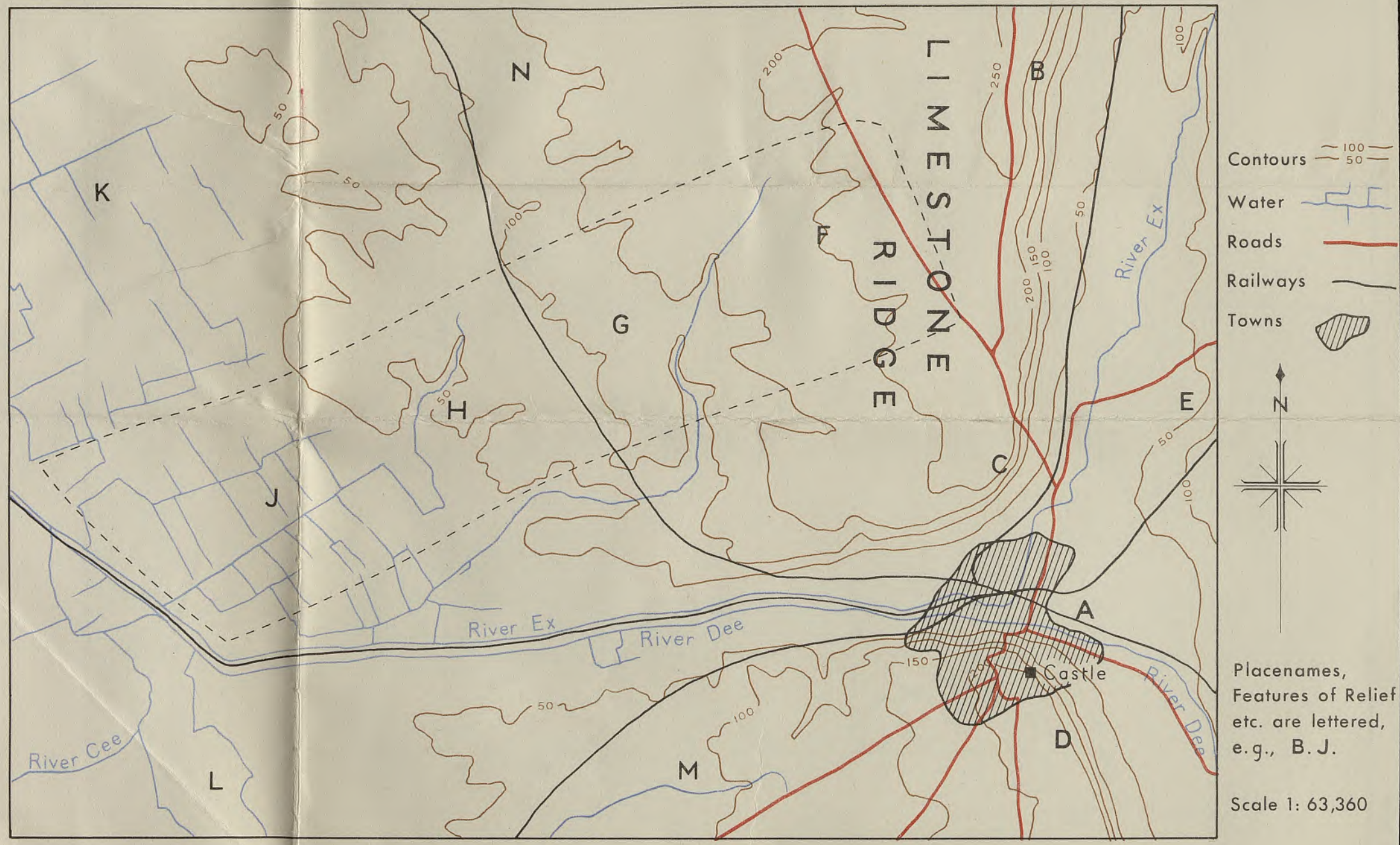

HIGHER GEOG. 1.
(O.S. Map)

SCOTTISH LEAVING CERTIFICATE EXAMINATION, 1959

GEOGRAPHY
HIGHER GRADE—(FIRST PAPER)

ORDNANCE SURVEY MAP

(C65060)

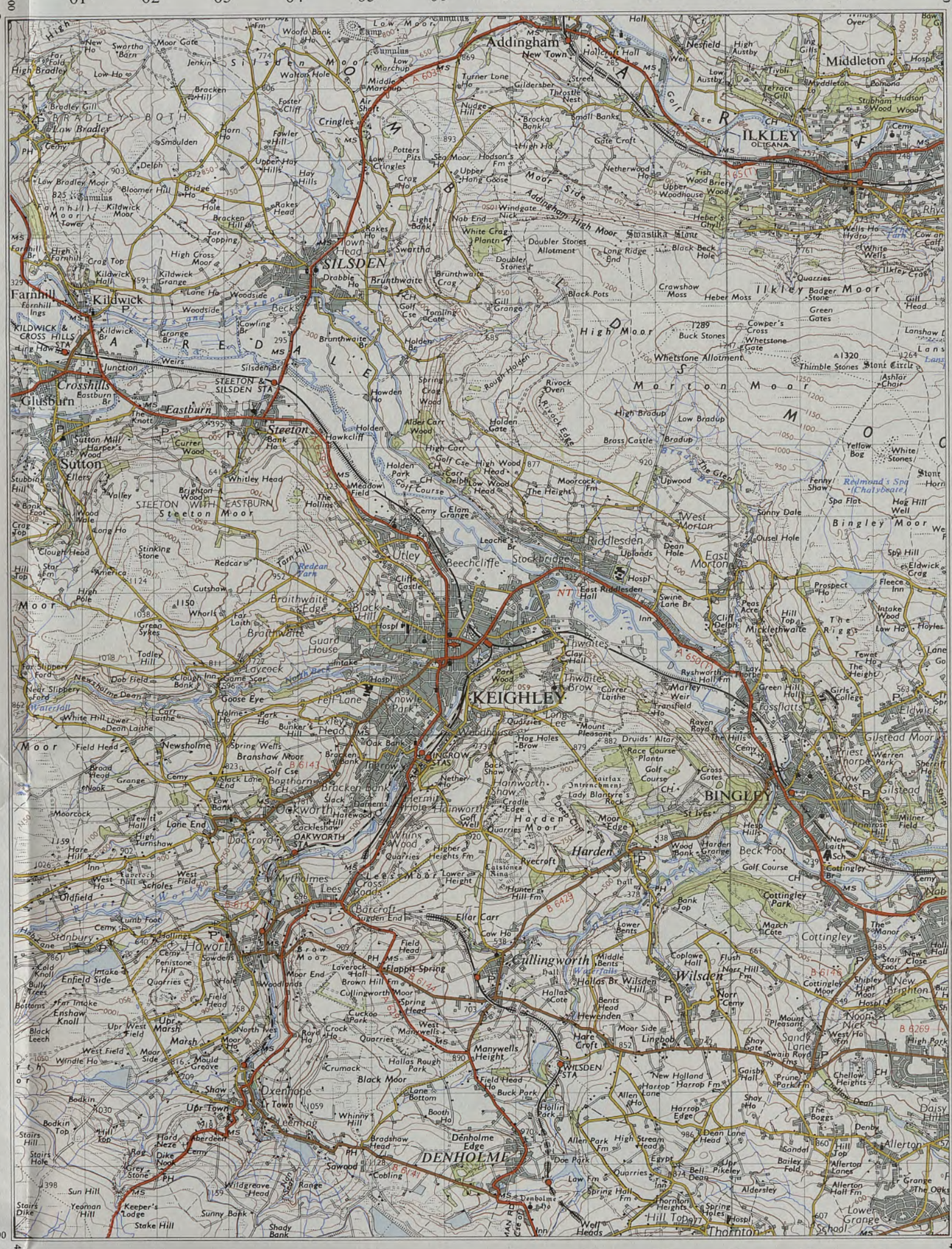

TO GIVE A GRID REFERENCE CORRECT TO 100 METRES

The incidence of grid letters and numbers on this sheet

SE (44)

EXAMPLE		WILSDEN STA.	
See diagram on left for Grid Letters. They are SE			
East *Take west edge of kilometre square in which point lies and read the large figures printed opposite this line on north or south margins. Estimate tenths Eastwards*	07 / 5 / 075	North *Take south edge of kilometre square in which point lies and read the large figures printed opposite this line on east or west margins. Estimate tenths Northwards*	35 / 4 / 354
Full 100 Metre Reference SE 075354			

The above Full Reference is unique. For many purposes the first grid letter can be omitted, giving a reference E 075354 *which recurs at intervals of 500 Kilometres. If both grid letters are omitted, the resulting reference* 075354 *recurs at intervals of 100 Kilometres. When the area concerned is sufficiently restricted, as will usually be the case with maps on scales of one inch to the mile and larger, both the grid letters are normally omitted.*

Heights are in feet above Mean Sea Level. Contours are at 50ft. intervals

True North at the West edge of this sheet is Grid North

Mag. North is about 9½°W. (June 1957) decreasing by about ¼° in four years

ORDNANCE SURVEY 1957.

SCOTTISH LEAVING CERTIFICATE EXAMINATION 1959

HISTORY
HIGHER GRADE—II

Wednesday, 4th March—1.30 p.m. to 4.0 p.m.

SECTION I

(To be attempted by all candidates)

FILL THIS IN FIRST

Name of School.....

Name of Pupil.....

TO BE PINNED INSIDE THE CANDIDATE'S BOOK OF ANSWERS AND THUS SENT TO THE DEPARTMENT.

[OVER

SECTION 1 (*a*)

On the accompanying map mark the position of **TEN** of the following with a cross and add the appropriate number as given below :—

(1) Barcelona.

(2) Belgrade.

(3) Bordeaux.

(4) Bruges.

(5) Elba.

(6) Frankfurt-on-Main.

(7) Jerusalem.

(8) Milan.

(9) Nantes.

(10) Pompeii.

(11) Pultawa.

(12) Sparta.

(13) Suez.

(14) Tunis.

(15) Venice. (5)

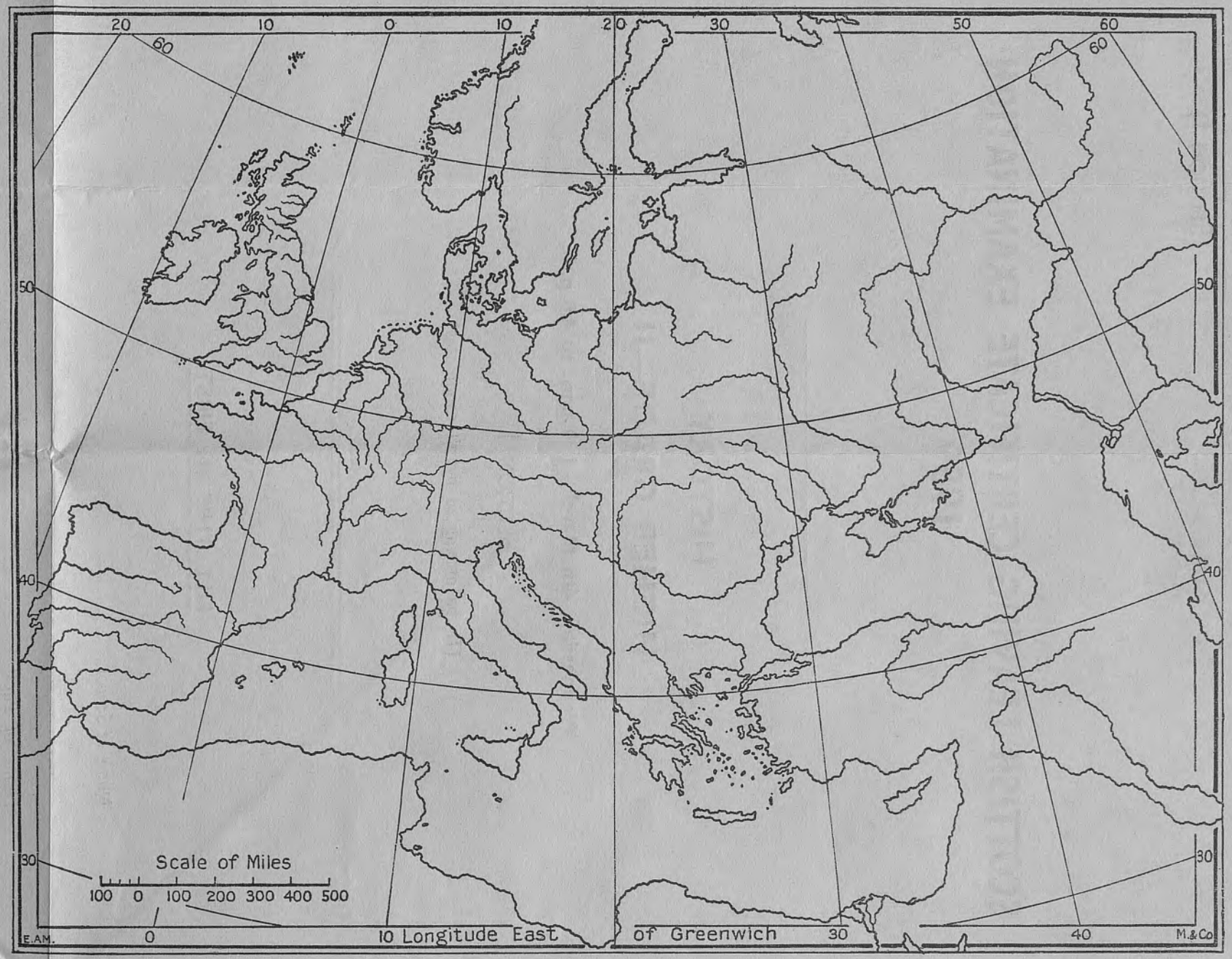

SECTION 1 (*b*)

Give the century, B.C. or A.D., of each of the following, indicate who or what each was, and say why each is important in history. Answers must be written in the space provided after each name. (15)

(1) St. Francis of Assisi (century) .....

.....

.....

(2) Garibaldi's Invasion of Sicily (century) .....

.....

.....

(3) Louis Pasteur (century) .....

.....

.....

(4) Cneius Pompeius Magnus (Pompey) (century) .....

.....

.....

(5) The Peace of the Pyrenees (century) .....

.....

.....

(6) The Battle of Salamis (century) .....

.....

.....

(7) Savonarola (century) .....

.....

.....

[TURN OVER

(8) The Treaty of Tilsit (century) .....

.....

.....

(9) Voltaire (century) .....

.....

.....

(10) Zwingli (century) .....

.....

.....

SCOTTISH LEAVING CERTIFICATE EXAMINATION
1959

HISTORY
HIGHER GRADE—I

Wednesday, 4th March—9.30 a.m. to 12 noon

SECTION I

(To be attempted by all candidates)

FILL THIS IN FIRST

Name of School .....

Name of Pupil .....

TO BE PINNED INSIDE THE CANDIDATE'S BOOK OF ANSWERS AND THUS SENT TO THE DEPARTMENT.

[OVER

SECTION 1 (*a*)

On the accompanying map mark the position of **TEN** of the following with a cross and add the appropriate number as given below :—

(1) Bannockburn.	(6) Dunkirk.	(11) Plymouth.
(2) Cambridge.	(7) Flodden.	(12) Preston.
(3) Cardiff.	(8) Gibraltar.	(13) St. Andrews.
(4) Cork.	(9) Hastings.	(14) Toulon.
(5) Dunkeld.	(10) La Rochelle.	(15) Whithorn. (5)

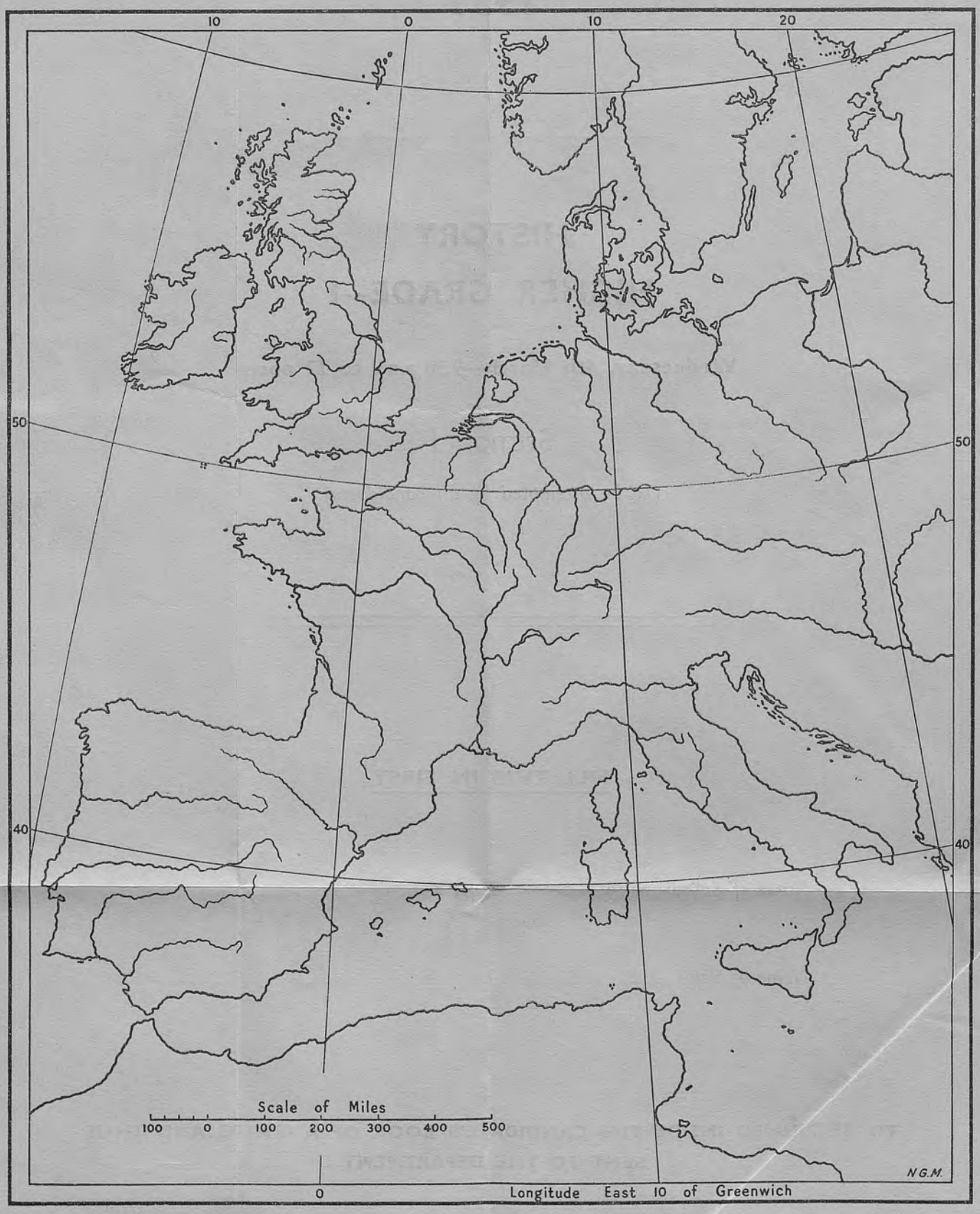

Section 1 (*b*)

Give the century, B.C. or A.D., of each of the following, indicate who or what each was, and say why each is important in history. Answers must be written in the space provided after each name. (15)

(1) Domesday Book (century) .....

.....

.....

(2) The Treaty of Falaise (century) .....

.....

.....

(3) Warren Hastings (century) .....

.....

.....

(4) Kenneth McAlpin (century) .....

.....

.....

(5) David Livingstone (century) .....

.....

.....

(6) Napier of Merchiston (century) .....

.....

.....

(7) The Taff Vale Judgment (century) .....

.....

.....

[TURN OVER

(8) The Treaty of Troyes (century).....

.....

.....

(9) The Peace of Wedmore (century) .....

.....

.....

(10) Sir Christopher Wren (century).....

.....

.....